DESPIECE // PART LIST

TXT PRO

125-200-250-280-300

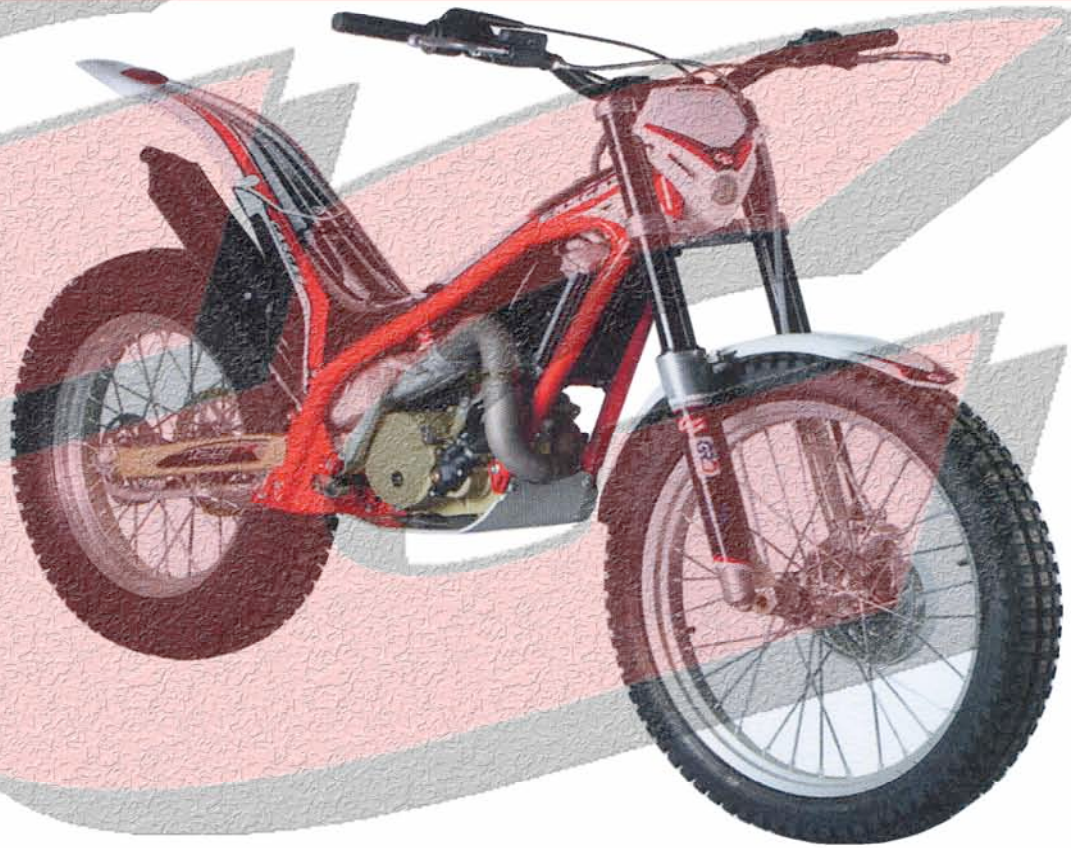

2009

DESPIECE // PART LIST

TXT PRO

125-200-250-280-300

2009

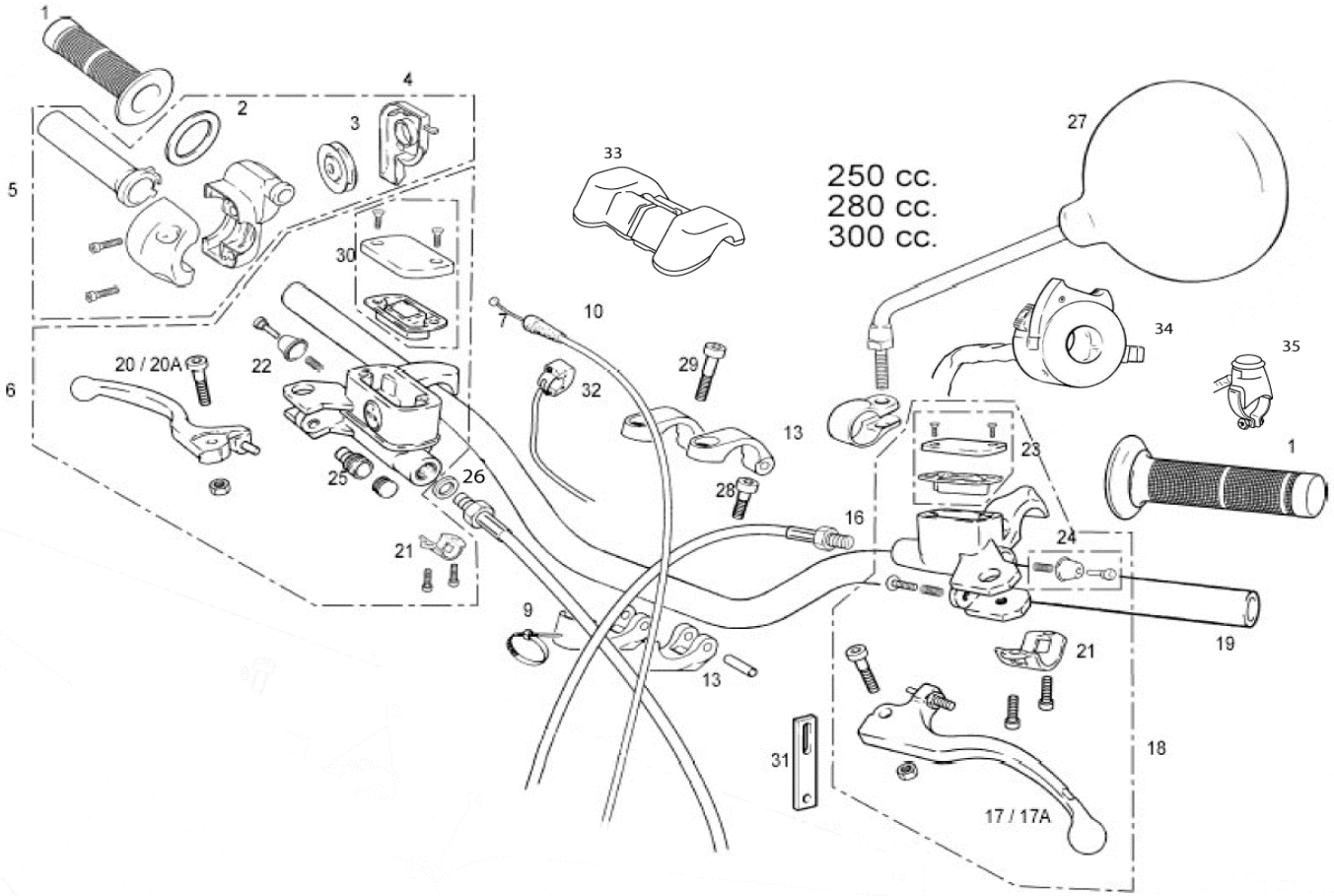
250 cc.
280 cc.
300 cc.
1
2
3
4
5
6
7
9
10
13
16
17 / 17A
18
19
20 / 20A
21
22
23
24
25
26
27
28
29
30
31
32
33
34
35

Nº	DESCRIPCION / DESCRIPTION	USA	125 RACING	125/200	250/280/300	Cant.
1	JUEGO EMPUÑADURAS TRIAL / HANDLEBAR GRIP (PAIR)	BT280536002	BT280536002	BT280536002	BT280536002	1
2	ARANDELA MANDO GAS / TWIST GRIP WASHER	BT27922078	BT27922078	BT27922078	BT27922078	1
3	RODILLO MANDO GAS / TWIST GRIP ROLLER	E119000	E119000	E119000	E119000	1
4	TAPA MANDO GAS / TWIST GRIP COVER	E140000	E140000	E140000	E140000	1
5	PUÑO MANDO GAS / CPT. TWIST GRIP	E100001	E100001	E100001	E100001	1
6	BOMBA FRENO DELANTERO / FRONT BRAKE PUMP	BT280222008	BT280222008	BT280222008	BT280222008	1
7	CABLE DE GAS / THROTTLE CABLE	BT27924008	BT27924008	BT27924008	BT27924008	1
9	BRIDA UNEX 4.8X20 / UNEX 4.8X20 CLAMP	BE25634009	BE25634009	BE25634009	BE25634009	1
10	GUARDAPOLVO PUÑO GAS / THROTTLE CABLE DUST COVER	G600000	G600000	G600000	G600000	1
13	BRIDA MANILLAR / HANDLEBAR CLAMP	BT280414012C	BT280414012C	BT280414012C	BT280414012C	1
16	LATIGUILLO EMBRAGUE TRIAL / CLUTCH TUBE	BT280522003	BT280522003	BT280522003	BT280522003	1
17	MANETA EMBRAGUE / CLUTCH LEVER	BT280222040	BT280222040	BT280222040	BT280222040	1
17A	MANETA EMBRAGUE RACING / CLUTCH LEVER R	BT280222040R	BT280222040R	BT280222040R	BT280222040R	1
18	BOMBA EMBRAGUE ACEITE / CLUTCH PUMP	BT280422009	BT280422009	BT280422009	BT280422009	1
19	MANILLAR / HANDLEBAR ASSY.	BT280324001RA	BT280324001RA	BT280324001RA	BT280324001RA	1
20	MANETA FRENO AJP 93 PLATA LARGA / BRAKE LEVER TRIAL			-	R390002PL	1
20A	MANETA FRENO TRIAL CORTA / BRAKE LEVER			-	BT27922045	1
21	SOPORTE BOMBA EMBRAGUE / CLUTCH PUMP SUPPORT			-	BE250022211	2
22	KIT BOMBA FRENO / BRAKE PUMP SET			-	BT27722208	1
23	KIT TAPA BOMBA / COVER PUMP SET			-	BT280422210	1
24	KIT BOMBA EMBRAGUE / CLUTCH PUMP SET			-	BT280422209	1
25	CASQUILLO PULSADOR FRENO DELANTERO / PUSH BUTTON BUSHING			-	BT27922079	1
26	ARANDELA COBRE 10X14X1 / 10X14X1 WASHER			-	BT280422007	1
27	ESPEJO RETROVISOR / REAR VIEW MIRROR		L300760	-	L300760	2
28	TORNILLO UFK 8X20 / 8X20 UFK SCREW	T0318020	T0318020	-	T0318020	2
29	TORNILLO UFK 8X50 / 8X50 UFK SCREW	T0318050	T0318050	-	T0318050	2
30	TAPA BOMBA FRENO / KIT COVER PUMP			-	BT27722210	1
31	GOMA SUJECIÓN CABLEADOS / WIRE SUBJET RUBBER	BFS450320067	BFS450320067	-	BFS450320067	1
32	INTERRUPTOR CDI / CDI SWITCH	BT280634007	BT280634007	-	BT280634007	1
33	PROTECTOR MANILLAR TRIAL / TRIAL HANDLEBAR PROTECTOR	BT251002808	BT251002808	BT251002808	BT251002808	1
34	CONMUTADOR LUZ / LIGHT SWITCH	ET602002808	ET602012808	ET602012808	ET602012808	1
35	PULSADOR PARO TRIAL PRO RACING 08 / TRIAL PRO RACING 08 STOP SWITCH	BC250334055				1

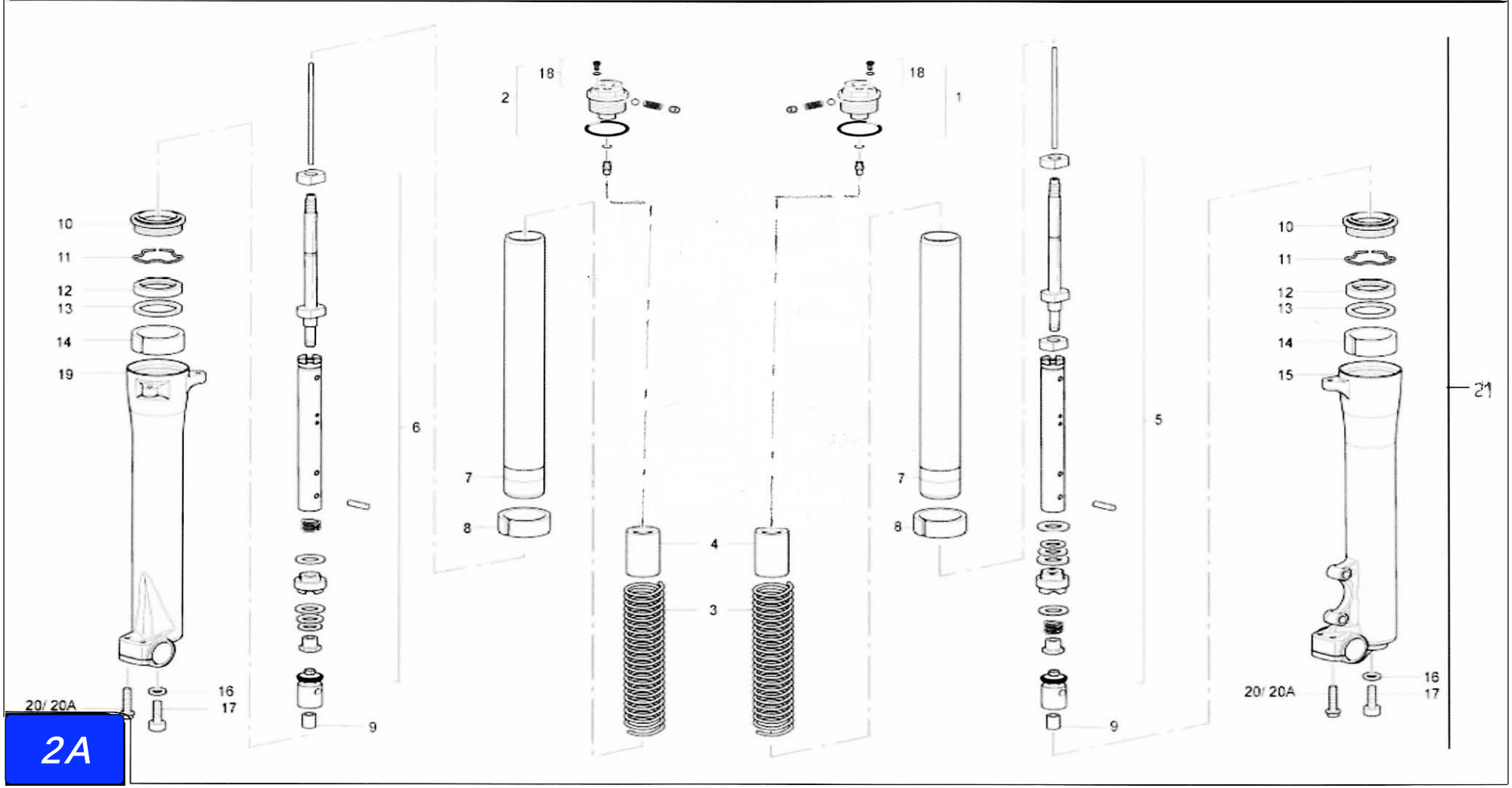
10
11
12
13
14
19
20/ 20A
16
17
6
9
2
18
7
8
4
3
1
5
15
21

Nº	DESCRIPCION / DESCRIPTION			Cant.
1	CTO. TAPÓN REGULACIÓN COMPRESIÓN / ADUSTING COMPRESSION CAP		BT280414105	1
2	CTO. TAPÓN REGULACIÓN EXTENSIÓN / ADUSTING RETURN CAP		BT280414106	1
3	MUELLE SUSPENSIÓN / FRONT FORK SPRING		BT201702809	2
4	TOPE PRECARGA AMORTIGUADOR / PRE-LOAD WASHER		BT280414148	2
5	REGULADOR HIDRÁULICO COMPR. / ADJUSTER TOP COMPRESSION		BT200902809	1
6	REGULADOR HIDRÁULICO EXT. / ADJUSTER TOP RETURN		BT280414115	1
7	BARRA SUSPENSIÓN / FRONT FORK INNER TUBE		BT201852809	2
8	GLACIER SUSPENSIÓN / GLACIER BUSHING		BT280414111	2
9	CENTRAJE TUBO HIDRÁULICO / SPACER BUSH		BT280414219	2
10	GUARDAPOLVO / DUST SEAL		BT280414131	2
11	SEEGER SUSPENSIÓN TRIAL / TRIAL FRONT FORK SEEGER		BT200252809	2
12	RETÉN / SEAL		BT280414212	2
13	ARANDELA SUPERIOR TRIAL / TRIAL UPPER WASHER		BT280414133	2
14	GLACIER BOTELLA SUSPENSIÓN / TUBE GLACIER BUSH		BT280414134	2
15	BOTELLA IZQUIERDA SUSPENSIÓN TRIAL / LEFT OUTER TUBE		BT202002809	1
16	ARANDELA GOMA INTERIOR / FRONT FORK WASHER SEAL		BT280414145	2
17	ALLEN / ALLEN SCREW		BT280414249	2
18	TORNILLO Y JUNTA TÓRICA / O'RING AND BOLT		BE2S714103	2
19	BOTELLA DERECHA SUSPENSIÓN TRIAL / RIGHT OUTER TUBE		BT201002809	1
20	ALLEN ESPECIAL 6X25 UFK / SPECIAL ALLEN 6X25		-	4
20A	TORNILLO ESPECIAL 6X15 / SPECIAL ALLEN 6X15		T0206025	4
21	SUSPENSIÓN TRIAL MARZOCCHI / TRIAL SUSPENSION SET MARZOCCHI		BT20001MZ2808	1

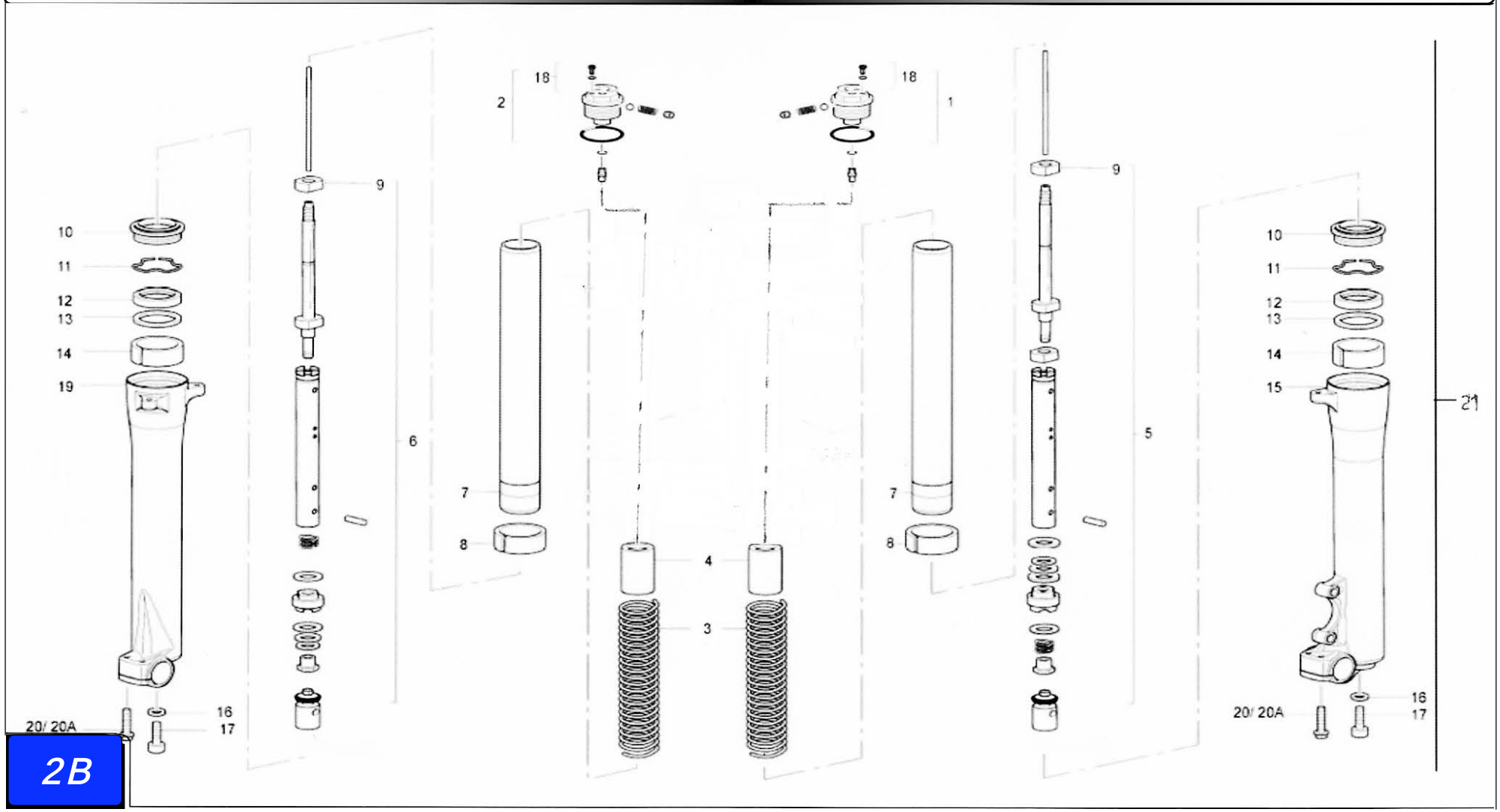
10
11
12
13
14
19
20/ 20A
16
17
9
6
2
18
7
8
4
3
1
5
15
21

Nº	DESCRIPCION / DESCRIPTION			Cant.
1	CTO. TAPÓN REGULACIÓN COMPRESIÓN / ADUSTING COMPRESSION CAP		BT280414105	1
2	CTO. TAPÓN REGULACIÓN EXTENSIÓN / ADUSTING RETURN CAP		BT280414106	1
3	MUELLE SUSPENSIÓN / FRONT FORK SPRING		BT201702809	2
4	TOPE PRECARGA AMORTIGUADOR / PRE-LOAD WASHER		BT200902809	2
5	REGULADOR HIDRÁULICO COMPR. / ADJUSTER TOP COMPRESSION		BT200902809	1
6	REGULADOR HIDRÁULICO EXT. / ADJUSTER TOP RETURN		BT280414115	1
7	BARRA SUSPENSIÓN / FRONT FORK INNER TUBE		BT201852809	2
8	GLACIER SUSPENSIÓN / GLACIER BUSHING		BT280414111	2
9	CASQUILLO DISTANCIADOR // SPACER BUSH		BT203402809	2
10	GUARDAPOLVO / DUST SEAL		BT280414131	2
11	SEEGER SUSPENSIÓN TRIAL / TRIAL FRONT FORK SEEGER		BT200252809	2
12	RETÉN / SEAL		BT280414212	2
13	ARANDELA SUPERIOR TRIAL / TRIAL UPPER WASHER		BT200202809	2
14	GLACIER BOTELLA SUSPENSIÓN / TUBE GLACIER BUSH		BT280414134	2
15	BOTELLA IZQUIERDA SUSPENSIÓN TRIAL / LEFT OUTER TUBE		BT202002809	1
16	ARANDELA GOMA INTERIOR / FRONT FORK WASHER SEAL		T4008012	2
17	ALLEN / ALLEN SCREW		T0308025	2
18	TORNILLO Y JUNTA TÓRICA / O'RING AND BOLT		BT201952809	2
19	BOTELLA DERECHA SUSPENSIÓN TRIAL / RIGHT OUTER TUBE		BT201002809	1
20	ALLEN ESPECIAL 6X25 UFK / SPECIAL ALLEN 6X25		T0206025	4
21	SUSPENSIÓN TRIAL SACHS / TRIAL SUSPENSION SET SACHS		BT20000CT3009	1

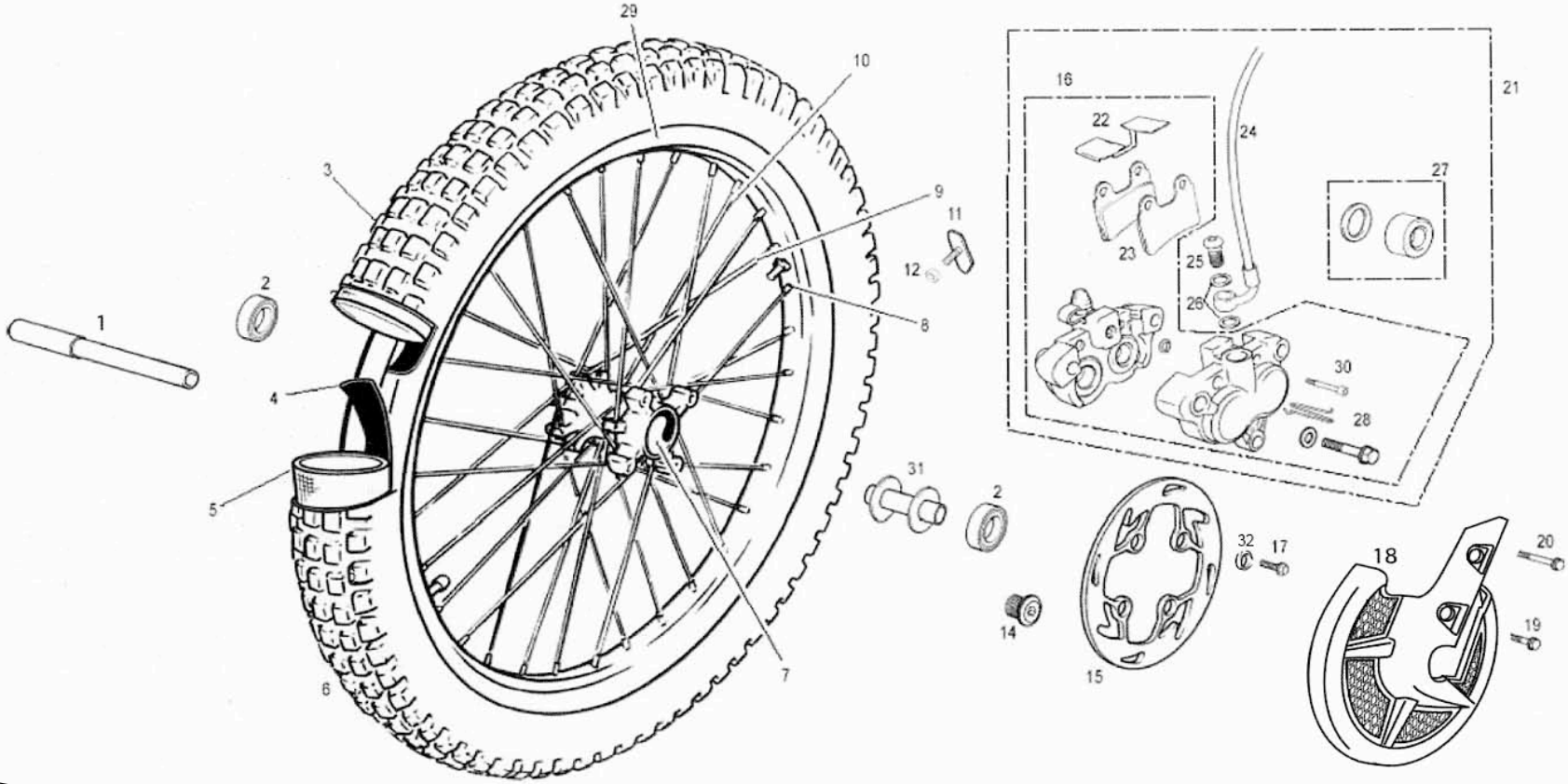
29
10
16
21
22
24
27
3
9
11
23
25
12
2
26
8
1
30
4
28
31
2
5
32
17
18
20
14
19
15
7
6

Nº	DESCRIPCION / DESCRIPTION	USA	125 RACING	TXT PRO 2009	250 / 280 AZ	Cant.
1	EJE RUEDA DELANTERA TRIAL PRO 2004 / FRONT WHEEL AXLE	BT280418017	BT280418017	BT280418017	-	1
2	COJINETE / BEARING	-	-	ME120136055	-	2
3	CUBIERTA DELANTERA 2.75X21 / FRONT TYRE	-	-	N140000	-	1
4	GOMA PROTECTOR R14025 2.75X21 REF. 554350 / FRONT FLAP TYRE	-	-	N100000	-	1
5	CÁMARA DELANTERA 2.75X21 REF. 450905 / FRONT TUBE	-	-	N120000	-	1
6	RUEDA DELANTERA TRIAL PRO / PRO FRONT WHEEL	BT280718000	BT280718000	BT280718000	-	1
7	CUBO RUEDA DELANTERA TRIAL / FRONT HUB WHEEL	BT280418007	BT280418007	BT280418007	-	1
8	TUERCA RADIOS 3MM. RUEDA DELANTERA DIA. 6.5 / SPOKE NUT	-	-	BT27718001	-	32
9	RADIO 3X257 RUEDA DELANTERA TRIAL / FRONT WHEEL SPOKE	-	-	BRT500118008	-	16
10	RADIO 3X254 RUEDA DELANTERA TRIAL / FRONT WHEEL SPOKE	-	-	BRT500118009	-	16
11	AGARRE CUBIERTA / TYRE CLAMP	-	-	BE25618027	-	1
12	TUERCA CON ARANDELA ESTRIADA M8 ZINCADA / NUT WITH WASHER	-	-	BE25818060	-	1
14	TORNILLO EJE RUEDA DEL. TRIAL PRO 2004 / FRONT WHEEL AXLE SCREW	BT280418026	BT280418026	BT280418026	-	1
15	DISCO FRENO DELANTERO / FRONT BRAKE DISK	-	-	BT280322011R	-	1
16	PINZA FRENO DELANTERO / FRONT BRAKE PADS	-	-	BT280222000	-	1
17	HEXAGONAL M8 CON ARANDELA / M8 HEXAGONAL SCREW WITH WASHER	-	-	T0206020	-	4
18	PROTECTOR DISCO FRENO / FRONT BRAKE DISK PROTECTOR	BT94100RA3008	BT94100RA3008	BT94100RA3008	BT94100AZ2808	1
19	TORNILLO PINZA FRENO DELANTERA INFERIOR 8X1.25X36.5 / SCREW	-	-	BT280022071	-	1
20	TORNILLO PINZA FRENO DELANTERA SUPERIOR 8X1.25X62.5 / SCREW	-	-	BT280022070	-	1
21	CTO. FRENO DELANTERO TRIAL / FRONT BRAKE SET	BT60000CT2808	BT280422108	BT280422108	BT280422108	1
22	PLANCHA PROTECCIÓN PASTILLAS FRENO / BRAKE PAD PROTECTOR	-	-	BT280222213	-	1
23	PASTILLA FRENO DELANTERA 229.99102 / FRONT BRAKE PAD	-	-	BT280222065	-	2
24	LATIGUILLO FRENO DELANTERO 2000 / FRONT BRAKE TUBE	BT611002808	BT280222002	BT280222002	BT280222002	1
25	TORNILLO LATERAL BOMBA FRENO TRAS. / HOSE SCREW	-	-	BT27722212	-	1
25A	RÁCORD ALUMINIO TI M10 100 / ALUMINIUM HOSE SCREW	-	-	BT280522212	-	1
26	ARANDELA PLANA COBRE 10.25X14X1.4 / 10.25X14X1.4 WASHER	-	-	BT27922072	-	2
27	KIT REPARACION PINZA FRENO DEL. / FRONT BLAKE CALIPER SET	-	-	BT280222201	-	1
28	CHAVETA SUJECCIÓN PASTILLA FRENO / FRONT BRAKE PAD KEY	-	-	R250000	-	1
29	LLANTA DELANTERA / FRONT WHEEL RIM	-	-	BRT500118006	-	1
30	TORNILLO SUJECCION PASTILLAS / BRAKE PADS SCREW	-	-	BT280222006	-	1
31	CASQUILLO INTERIOR BUJE / BUSHING	-	-	BT280418051	-	1
32	DISTANCIADOR DISCO FLOTANTE / WASHER FLOATING DISC	-	-	BT27918019	-	4

35
37
29
30
31
27
22
8
8
21
7
6
4
5
16
15
23
14
17
23
18
15
11
9
26
25
10
19
2
1
11
18
3
12
13
28
18
32
33
24

Nº	DESCRIPCION / DESCRIPTION	USA	125 RACING	ROJO / RED	AZUL / BLUE	Cant.
1	GUARDABARROS TRAS. TRIAL HOMOLOGADO / TRIAL REAR FENDER		BT93500HCT2809	BT93500HCT2809	BT93500HAZCT2809	1
2	TORNILLO NEGRO ULS 6X16 / 6X16 ULS SCREW		-	T0506016N	-	3
3	PORTAMATRICULAS TRIAL HOMOLOGADO / TRIAL PLATE SUPPORT		-	BT280620003	-	1
4	TORNILLO ULS 6X14 CON ARANDELA PLATA / ULS SCREW 6X14		-	T0556014	-	1
5	GANCHO INOXIDABLE / RUSTLESS HOOK		-	M130000	-	1
6	TUERCA CON ARANDELA M6 / M6 NUT WITH WASHER		-	T2206000	-	2
7	BRIDA UNEX / UNEX CLAMP		-	BE25634007	-	2
8	TORNILLO ROSCA-CHAPA 3X9 / 3X9 SCREW		-	T1003009	-	4
9	PROTECTOR RADIADOR DERECHO / RIGHT RADIATOR COVER	BT91500RA3008	BT91500RA3008	BT91500RA3008	BT91500NR2809	1
10	PROTECTOR RADIADOR IZQUIERDO / LEFT RADIATOR COVER	BT92000RA3008	BT92000RA3008	BT92000RA3008	BT92000NR2809	1
11	TORNILLO CHAPA 4.2X13 / SCREW 4.2X13	-	-	T0804612	-	2
12	ULS 5X8 / 5X8 ULS SCREW			T0505008	-	2
13	GUARDABARROS DELANTERO 2005 / TRIAL 2005 FRONT FENDER	BT91000CT2809	BT91000CT2809	BT91000CT2809	BT91000AZ2809	1
14	PROTECTOR ESCAPE TRIAL 2002 / EXHAUST PROTECTOR	-	-	BT280226021	-	1
15	REMACHE ALUMINIO 4X12 CABOTA NEGRA / ALUMINIUM RIVET	-	-	T4504012N	-	2
16	GUARDABARROS TRAS. TRIAL 2009 / TRIAL 2009 REAR FENDER	BT93500CT2809	BT93500CT2809	BT93500CT2809	BT935000AZ2809	1
17	ULS 6X16 CON ARANDELA NEGRO / 6X16 BLACK ULS WITH WASHER	-	-	T0556016	-	1
18	TORNILLO CONICO 6X16 NEGRO / BLACK 6X16 CONIC SCREW	-	-	T0406016	-	5
19	TAPA CAJA FILTRO TRIAL 2009 / TRIAL PRO 2009 FILTER BOX COVER	BT945012809	BT945012809	BT945012809	BT945012AZ2809	1
20	BASE ASIENTO TRIAL 2009 / TRIAL 2009 SEAT STRUCTURE	BT940502809	BT940502809	BT940502809	BT94500AZ2809	1
21	FARO DELANTERO TRIAL 2009 / TRIAL 2009 FRONT HEADLIGHT			BT90500H2809		
22	ÓPTICA HOMOLOGADA / APPROVED HEADLIGHT		-	BT280120022	-	1
23	REMACHE PLASTICO BLANCO GUARDAB. TRAS. / PLASTIC RIVET	T4513270	T4513270	T4513270	T4513270	2
24	ADH. PROTECTOR ESCAPE AMIANTO / EXHAUST PROTECTOR STICKER	-	-	BT280238059	-	1
25	PUENTE HORQUILLA DELANTERA / FRONT SUSPENSION UNION	-	-	BT280110055	-	1
26	TORNILLO ESPECIAL 6X14 / 6X14 SPECIAL SCREW	-	-	T0206014	-	4
27	CTO. FARO HOMOLOGADO / APPROVED HEADLIGHT SET		BT90500HCT2809	BT90500HCT2809	BT90500HAZCT2809	1
28	TUERCA AUTOBLOCANTE M6 C/ARAND / SELF-LOCKING NUT M6		-	T2206002	-	3
29	TORNILLO ROSCA-CHAPA 3.5X13 / SCREW 3.5X13	-	-	T0603513	-	3
30	FARO PILOTO TRASERO TRIAL / REAR LIGHT	ET30000CT2808	ET30000CT2808	ET30000CT2808	ET30000CT2808	1
32	TUBO FLEXIBLE SILICONA BASE ASIENTO / SEAT BASE SILICON HOSE			BT280236042	-	1
33	ARANDELA 5X12X1'5 / WASHER 5X12X1'5			T4005012	-	1
34	ALARGO INSTALACIÓN PILOTO TRASERO / EXTEND INSTALLATION REAR LIGHT	ET300102808				1
35	FARO TRIAL RACING / RACING FRONT HEADLAMP TRIAL			BT90500RC2809		1

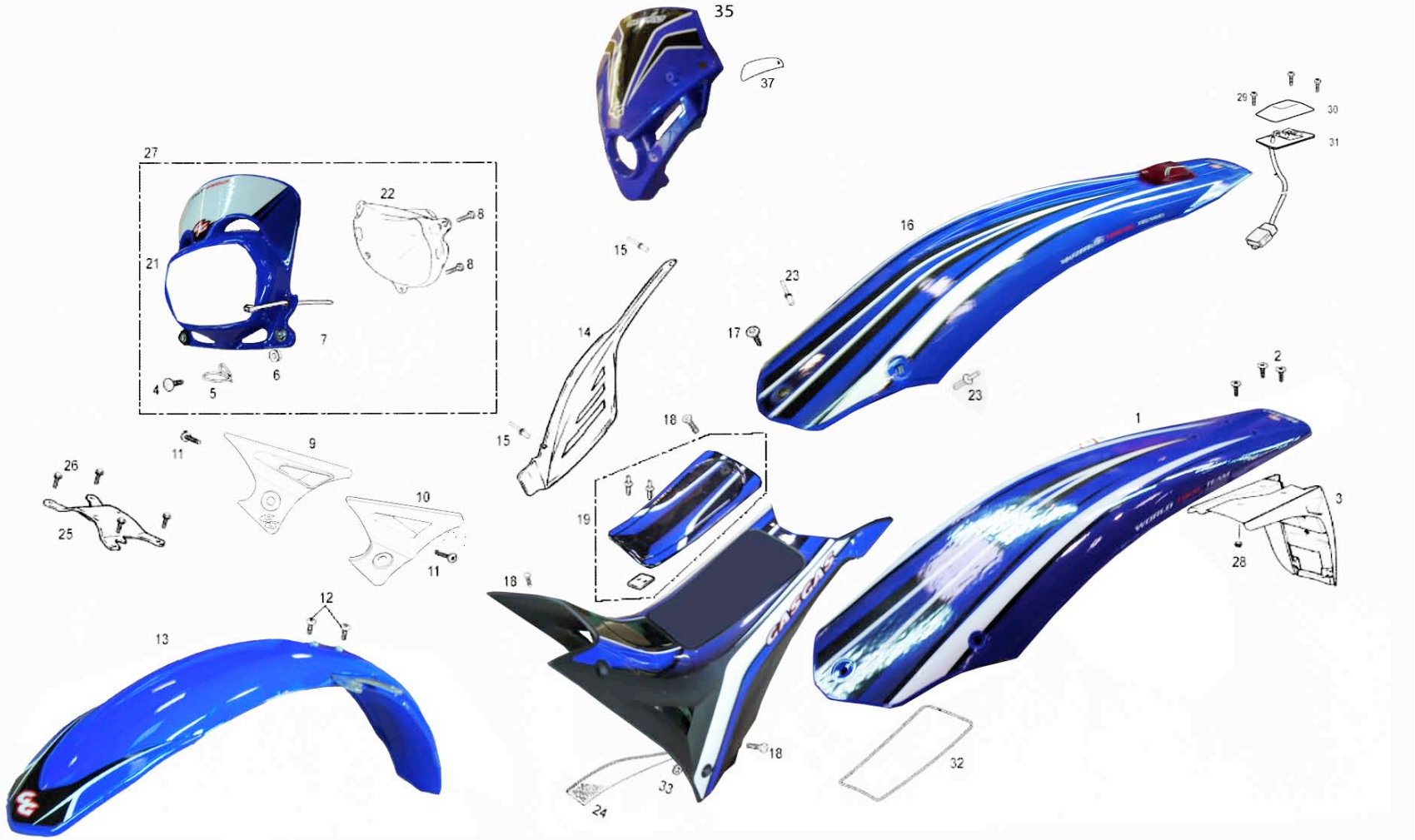
35
37
29
30
31
27
22
8
8
21
7
6
4
5
16
15
23
14
17
23
2
18
1
15
11
9
26
10
19
3
25
11
28
18
12
13
18
32
33
24

Nº	DESCRIPCION / DESCRIPTION		AZUL / BLUE	Cant.
1	GUARDABARROS TRAS. TRIAL HOMOLOGADO / TRIAL REAR FENDER		BT93500HAZCT2809	1
2	TORNILLO NEGRO ULS 6X16 / 6X16 ULS SCREW		T0506016N	3
3	PORTAMATRICULAS TRIAL HOMOLOGADO / TRIAL PLATE SUPPORT		BT280620003	1
4	TORNILLO ULS 6X14 CON ARANDELA PLATA / ULS SCREW 6X14		T0556014	1
5	GANCHO INOXIDABLE / RUSTLESS HOOK		M130000	1
6	TUERCA CON ARANDELA M6 / M6 NUT WITH WASHER		T2206000	2
7	BRIDA UNEX / UNEX CLAMP		BE25634007	2
8	TORNILLO ROSCA-CHAPA 3X9 / 3X9 SCREW		T1003009	4
9	PROTECTOR RADIADOR DERECHO / RIGHT RADIATOR COVER		BT91500NR2809	1
10	PROTECTOR RADIADOR IZQUIERDO / LEFT RADIATOR COVER		BT92000NR2809	1
11	TORNILLO CHAPA 4.2X13 / SCREW 4.2X13		T0804612	2
12	ULS 5X8 / 5X8 ULS SCREW		T0505008	2
13	GUARDABARROS DELANTERO 2005 / TRIAL 2005 FRONT FENDER		BT91000AZCT2809	1
14	PROTECTOR ESCAPE TRIAL 2002 / EXHAUST PROTECTOR		BT280226021	1
15	REMACHE ALUMINIO 4X12 CABOTA NEGRA / ALUMINIUM RIVET		T4504012N	2
16	GUARDABARROS TRAS. TRIAL 2009 / TRIAL 2009 REAR FENDER		BT935000AZCT2809	1
17	ULS 6X16 CON ARANDELA NEGRO / 6X16 BLACK ULS WITH WASHER		T0556016	1
18	TORNILLO CONICO 6X16 NEGRO / BLACK 6X16 CONIC SCREW		T0406016	5
19	TAPA CAJA FILTRO TRIAL 2009 / TRIAL PRO 2009 FILTER BOX COVER		BT945012AZ2809	1
20	BASE ASIENTO TRIAL 2009 / TRIAL 2009 SEAT STRUCTURE		BT94050AZ2809	1
21	FARO DELANTERO TRIAL 2009 / TRIAL 2009 FRONT HEADLIGHT		BT90500HAZ2809	
22	ÓPTICA HOMOLOGADA / APPROVED HEADLIGHT		BT280120022	1
23	REMACHE PLASTICO BLANCO GUARDAB. TRAS. / PLASTIC RIVET		T4513270	2
24	ADH. PROTECTOR ESCAPE AMIANTO / EXHAUST PROTECTOR STICKER		BT280238059	1
25	PUENTE HORQUILLA DELANTERA / FRONT SUSPENSION UNION		BT280110055	1
26	TORNILLO ESPECIAL 6X14 / 6X14 SPECIAL SCREW		T0206014	4
27	CTO. FARO HOMOLOGADO / APPROVED HEADLIGHT SET		BT90500HAZCT2809	1
28	TUERCA AUTOBLOCANTE M6 C/ARAND / SELF-LOCKING NUT M6		T2206002	3
29	TORNILLO ROSCA-CHAPA 3.5X13 / SCREW 3.5X13		T0603513	3
30	FARO PILOTO TRASERO TRIAL / REAR LIGHT		ET30000CT2808	1
32	TUBO FLEXIBLE SILICONA BASE ASIENTO / SEAT BASE SILICON HOSE		BT280236042	1
33	ARANDELA 5X12X1'5 / WASHER 5X12X1'5		T4005012	1
34	ALARGO INSTALACIÓN PILOTO TRASERO / EXTEND INSTALLATION REAR LIGHT		ET300102808	1
35	FARO TRIAL RACING / RACING FRONT HEADLAMP TRIAL		BT90500AZRC2809	1

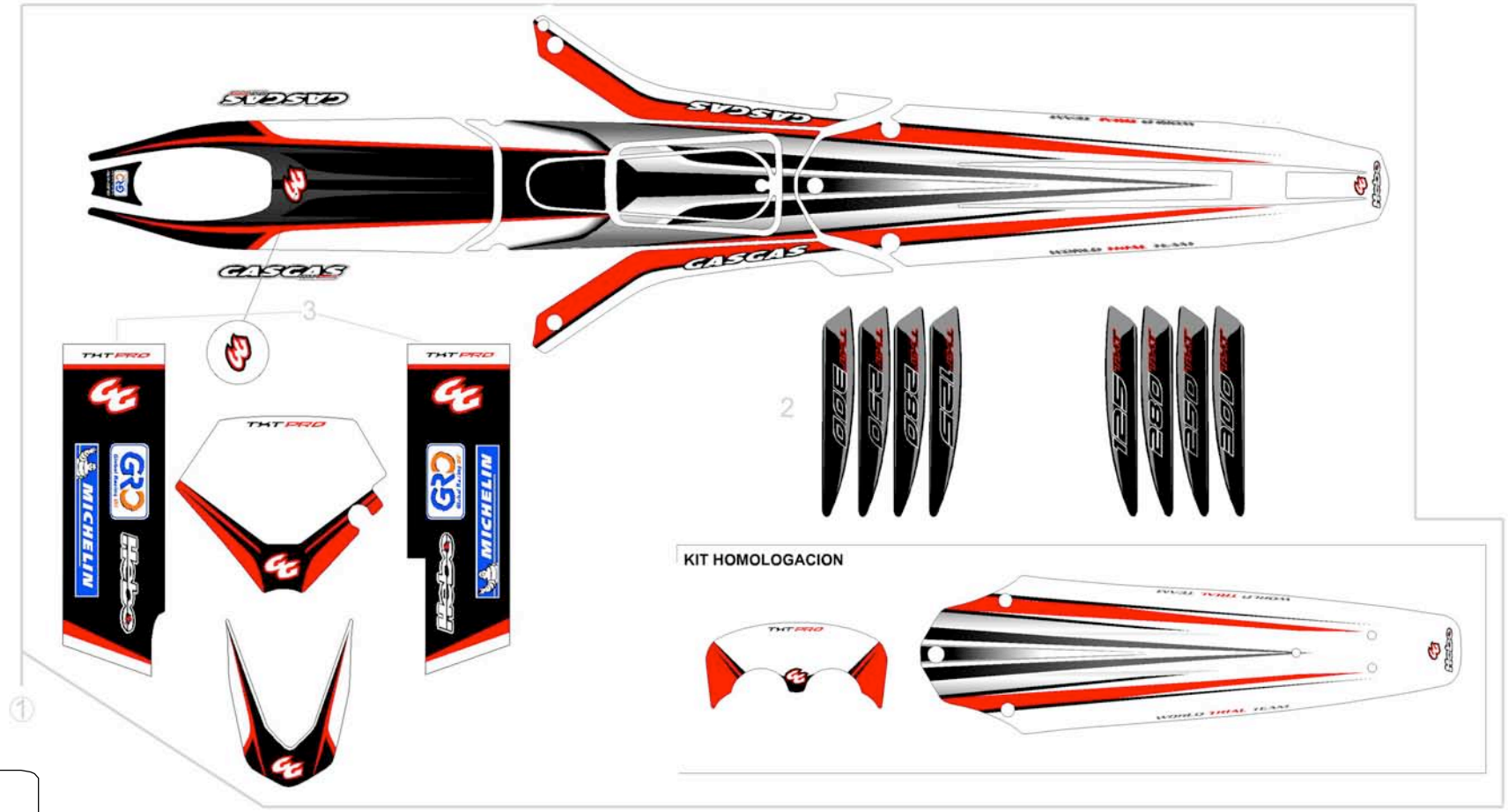
GASGAS
GASGAS
GASGAS
3
TXT PRO
TXT PRO
TXT PRO
MICHELIN
MICHELIN
2
KIT HOMOLOGACION
TXT PRO
1

Nº	DESCRIPCION / DESCRIPTION	125	200	250	280	300	Cant.
1	KIT ADHESIVO TXT PRO 2009 // TXT PRO 2009 STICKER SET	BT950002809	BT950002809	BT950002809	BT950002809	BT950002809	1
2	KIT ADH. BASCULANTE / SET ADHESIVE TILT	BT95500CT1209	BT95500CT2009	BT95500CT2509	BT95500CT2809	BT95500CT3009	1
3	KIT ADH. BARRA / SET ADHESIVE SUSPENSION	BT950122809	BT950122809	BT950122809	BT950122809	BT950122809	1

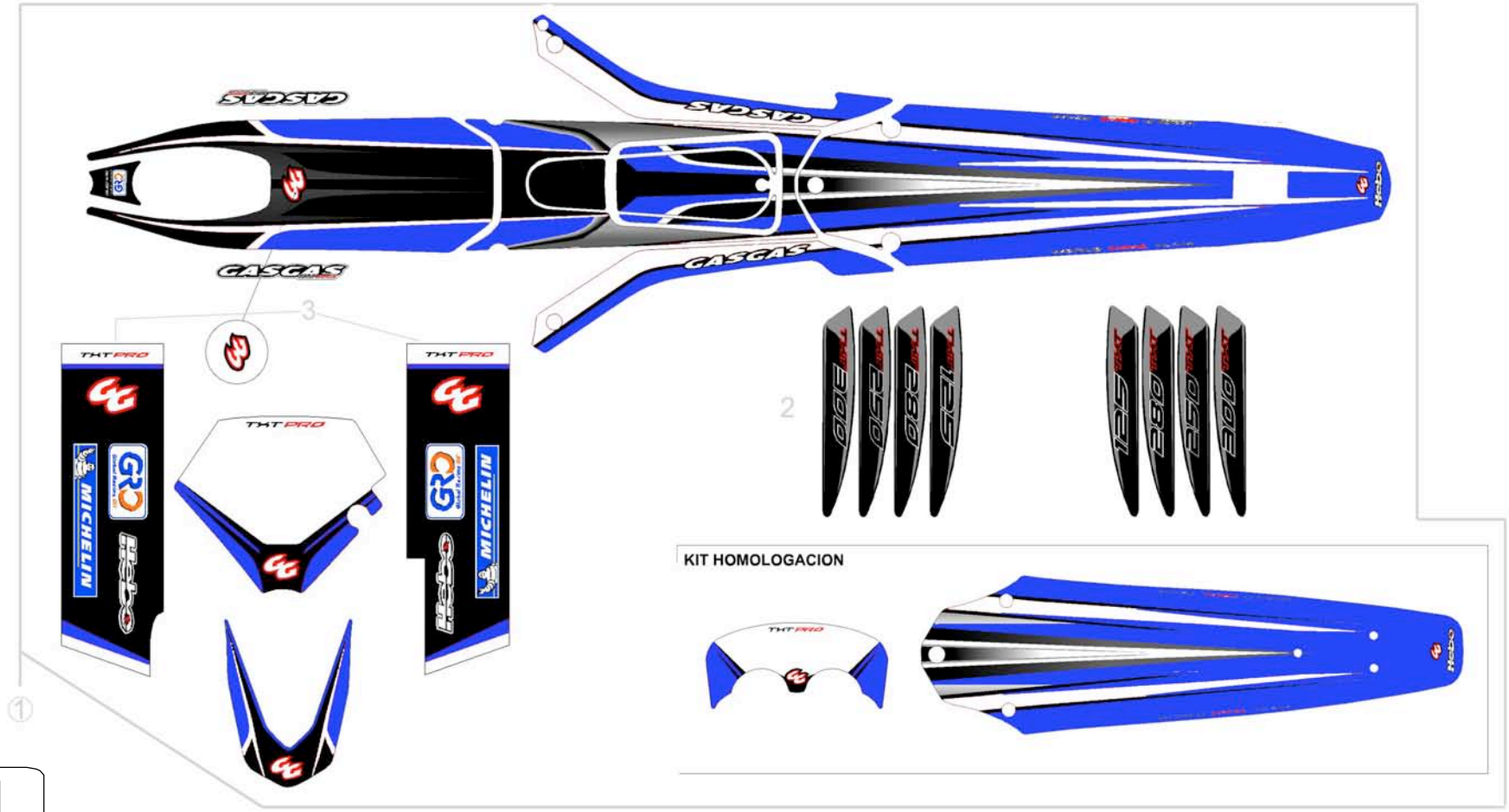
GASGAS
TXT PRO
MICHELIN
KIT HOMOLOGACION
125 TXT
250 TXT
300 TXT
1
2
3

Nº	DESCRIPCION / DESCRIPTION				280	Cant.
1	KIT ADHESIVO TXT PRO 2009 // TXT PRO 2009 STICKER SET				BT95000AZ2809	1
2	KIT ADH. BASCULANTE /SET ADESHIVE TILT				BT95500CT2809	1
3	KIT ADH. BARRA / SET ADHESIVE SUSPENSION				BT95012AZ2809	1

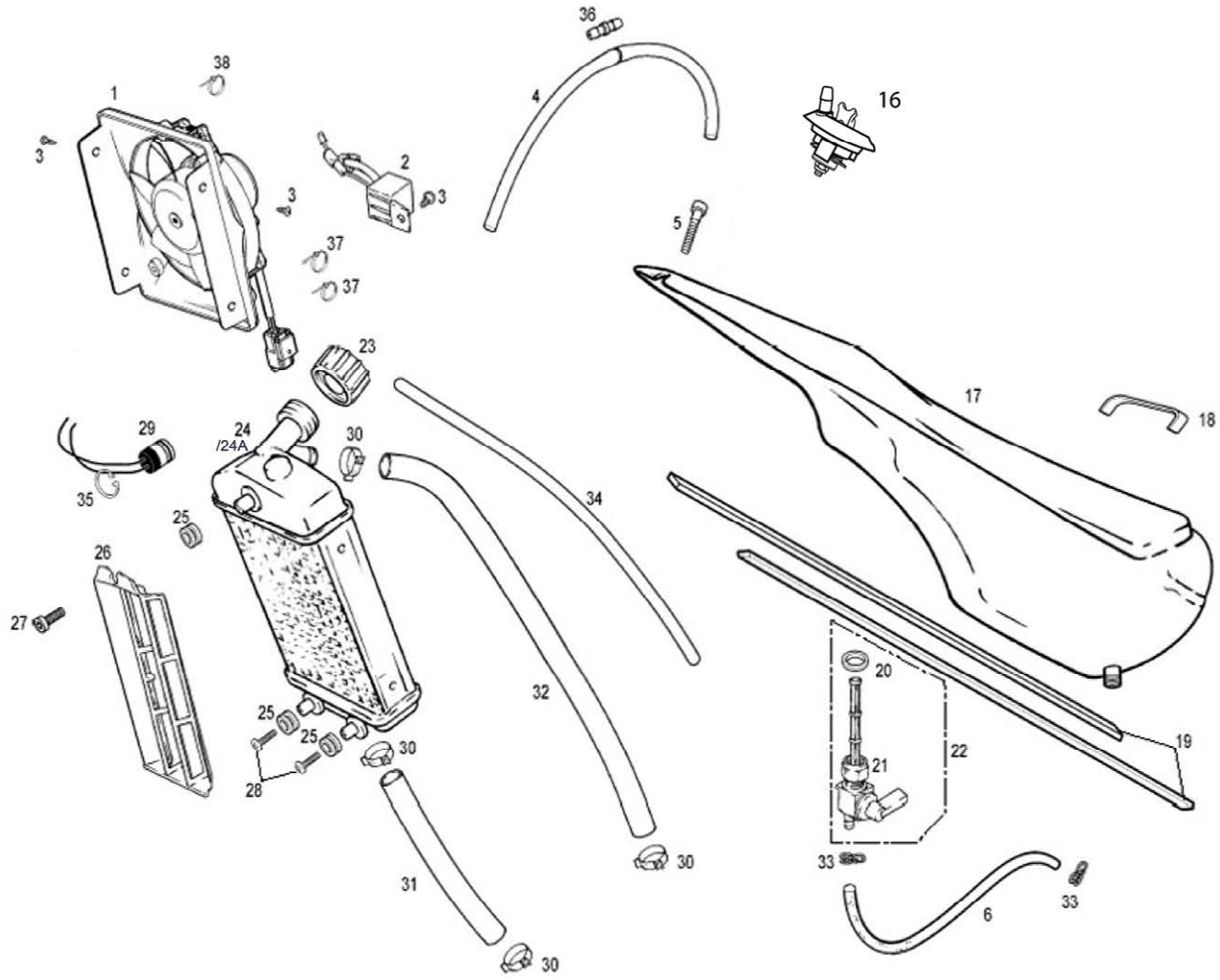
36
38
1
4
16
3
2
3
3
5
37
37
23
17
18
29
24
/24A
30
35
34
25
26
27
20
32
25
25
30
22
21
19
28
30
33
31
33
6
30

Nº	DESCRIPCION / DESCRIPTION	125 / 200 / 250 / 280	300	Cant.
1	VENTILADOR F-14 / FUN F-14	BFS450332340		1
2	MODULO VENTILADOR / FUN MODULE	BT120532342	BT280532342	1
3	TORNILLO ROSCA CHAPA CON ARANDELA / SCREW THREAD WITH WASHER	-	T0604210	3
4	TUBO DESVAPORIZADOR DEPÓSITO 41cm. / TANK TUBE 41CM. LONG	-	BT280310018	1
5	TORNILLO M6X30 / SCREW M6X30	-	T0206030	1
6	TUBO GASOLINA TRIAL / FUEL HOSE	-	BT280236004	1
16	CTO. TAPÓN GASOLINA / CPT. PLUG FUEL-PETROL	-	BT280420010	1
17	DEPÓSITO TRIAL / FUEL TANK	-	BT760002809	1
18	JUNTA ADHESIVA DEPÓSITO 125x10 / STICKER TANK GASKET	-	BT280038018	1
19	JUNTA ADHESIVA DEPÓSITO CHASIS 38 X 1 / STICKER TANK GASKET,FRAME	-	BT27838018	2
20	ARANDELA GRIFO DEPÓSITO / WASHER TANK TAP	-	BT27910131	1
21	TUERCA GRIFO DEPÓSITO / NUT TANK TAP	-	BT27910132	1
22	GRIFO GASOLINA C/90 / FUEL VALVE	-	BT27810031	1
23	TAPÓN RADIADOR TP50806 TRIAL 2002 / RADIATOR CAP	-	BT280232032	1
24	CTO. RADIADOR CON VENTILADOR TRIAL PRO / TRIAL PRO RADIATOR	-	BT70000CT2808	1
25	GOMAS RADIADOR A CHASIS / RADIATOR TUBE TO FRAME	-	G220000	3
26	REJILLA RADIADOR TRIAL / RADIATOR PROTECTOR		BT730502809	1
27	ALLEN 6X14 / 6X14 ALLEN BOLT	-	T0306014	1
28	ULS 6x10 CON ARANDELA / 6X10 ULS BOLT WITH WASHER	-	T0556010	2
29	TERMO CONTACTO / TERMO-CONTACT	-	BT280432065	1
30	ABRAZADERA COBRA DE 21 / COBRA CLAMP 21	-	L200046	4
31	TUBO INFERIOR RADIADOR-BOMBA AGUA / RADIATOR-WATER PUMP LOWER TUBE	-	BT280232003	1
32	TUBO SUPERIOR RADIADOR-CULATA / RADIATOR-CYL. HEAD UPPER TUBE	-	BT280432002	1
33	ABRAZADERA ELÁSTICA NEGRA ALAMBRE 9.3X9.9 2016055 / SPRING CLAMP	-	L200036	2
34	TUBO DESVAPORIZADOR TAPÓN GAS (26cm) / RADIATOR EXCESS TUBE HOSE	-	BE25620011	1
35	CLIP TERMOSTATO PRO 2005 / SEEGER	-	BT280432066	1
36	VÁLVULA DESVAP. DEPÓSITO / UNSTEAMER VALVE	-	BT27836025	1
37	BRIDA UNEX CORTA 2.5X98 / UNEX CALMP	-	BE25634010	2
38	BRIDA UNEX 2244 4.8X20 / UNEX CLAMP	-	BE25634009	1
24A	RADIADOR / RADIATOR	-	BT700002808	1

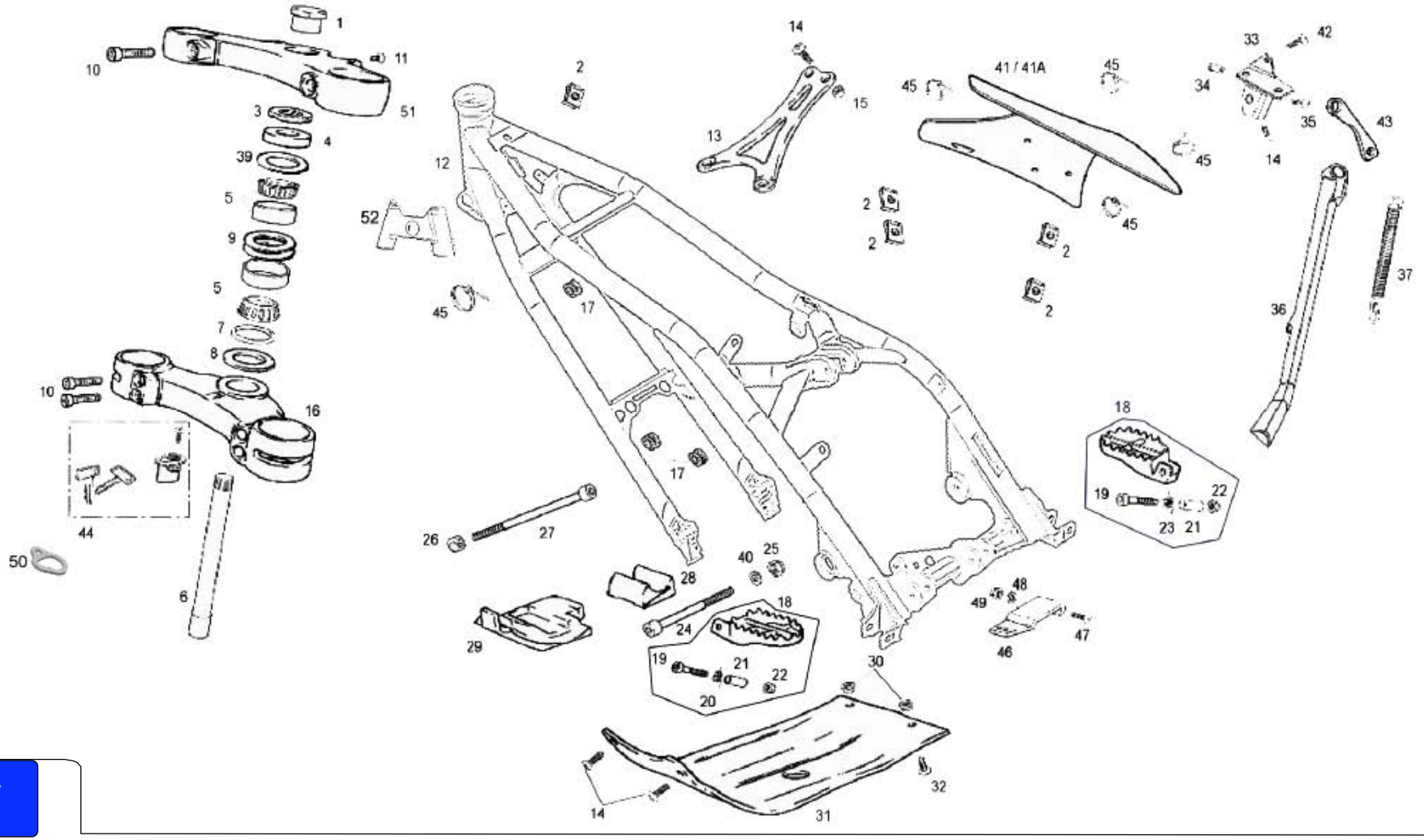
1
10
11
51
3
4
39
5
9
5
7
8
10
16
44
50
6
2
12
52
45
17
14
13
15
41 / 41A
45
45
45
45
2
2
2
2
33
42
34
35
43
14
37
36
18
19
22
23
21
26
27
40
25
28
24
18
29
19
21
22
20
30
49
48
46
47
14
31
32

Nº	DESCRIPCION / DESCRIPTION	MODELO AZUL 09	USA	125 RACING	125 / 200	250 / 280 / 300	Cant.
1	TUERCA SUPERIOR DIRECCIÓN TRIAL / NUT TOP STEERING AXLE		BT280410030	BT280410030	BT280210030	BT280410030	1
2	TUERCA NUT 956 RAPIDA M6 / M6 FAST NUT		T2606000	T2606000	T2606000	T2606000	5
3	TUERCA INFERIOR DIRECCIÓN TRIAL / NUT UNDER TOP CLAMP		BT280410029	BT280410029	BT280210029	BT280410029	1
4	GUARDAPOLVO COJINETES DIRECCIÓN / BEARING STEERING, DUST COVER		BEP250210026	BEP250210026	BEP250210026	BEP250210026	1
5	COJINETE DIRECCIÓN URBXA 32004 / BEARING STEERING		BT280210008	BT280210008	BT280210008	BT280210008	2
6	EJE DIRECCIÓN TRIAL 2002 / AXLE STEERING				BT280214003	-	1
7	TÓRICA DIRECCIÓN 37X2,5 ENDUPAMP 250 / O'RING STEERING		BEP250210012	BEP250210012	-	BEP250210012	1
8	ARANDELA REGLAJE BLANCA / WHITE WASHER		BT280210026	BT280210026	-	BT280210026	1
9	ARANDELA 36X42X0.5 / 36X42X0.5 WASHER		T4003642	T4003642	-	T4003642	2
10	ALLEN BRIDA INFERIOR / ALLEN SCREW				T0308030	T0306025	6
11	ULS 6X10 DIRECCIÓN / STEERING ULS				T0506010	-	1
12	CHASIS TRIAL / TRIAL FRAME	BT10000BL2809	BT100002809	BT100002809	BT100002809	BT100002809	1
13	TIRANTE CILINDRO / BRACE CYLINDER		BT280110050	BT280110050	BT280110050	BT280110050	1
14	ULS 8X20 / 8X20 ULS		T0508020	T0508020	T0508020	T0508020	7
15	TUERCA AUTOBLOCANTE M-8 ALTA / SELF-LOCKING NUT M8 HIGH		T2108002	T2108002	T2108002	T2108002	4
16	PLATINA INFERIOR TRIAL / FORK CLAMP (LOWER)		BT210002809	BT210002809	BT210002809	BT210002809	1
17	GOMAS RADIADOR A CHASIS / RADIATOR PROTECTOR RUBBER		G220000	G220000	G220000	G220000	3
18	CTO. ESTRIBOS TXT PRO / JOINT STIRRUPS		BT14000CT2808	BT14000CT2808	BT14000CT2808	BT14000CT2808	1
19	PASADOR ESTRIBERA / SCREW		T0508045	T0508045	-	T0508045	2
20	MUELLE ESTRIBO IZQUIERDO / SPRING FOOTSTEP (LEFT)		M100004	M100004	-	M100004	1
21	CASQUILLO ESTRIBO TRIAL-99 / BUSH FOOTSTEP		BT27910006	BT27910006	-	BT27910006	2
22	TUERCA AUTOBLOCANTE M-8 BAJA (DIN 982) / NUT NYLOCK LOW		T2108001	T2108001	-	T2108001	2
23	MUELLE ESTRIBO DERECHO / SPRING FOOTSTEP, RIGHT		M100003	M100003	-	M100003	1
24	ALLEN 10x85 / 10X85 ALLEN BOLT		T0301085	T0301085	-	T0301085	1
25	TUERCA AUTOBLOCANTE M10 BAJA / SPECIAL M10 NUT		T2110001	T2110001	-	T2110001	1
26	TUERCA ESPECIAL M10 / SPECIAL M10 NUT		BT280210069	BT280210069	-	BT280210069	1
27	ALLEN M10X140 ZINCADO 12.9 / SCREW, BOLT ALLEN M10X140		T0310140	T0310140	-	T0310140	1
28	GOMA PROTECTOR TRASERO MOTOR / REAR ENGINE PROT. RUBBER		BT280336029	BT280336029	-	BT280336029	1
29	GOMA PROTECTOR DELANTERO MOTOR / FRONT ENGINE PROT. RUBBER		BT280236030	BT280236030	-	BT280236030	1
30	CASQUILLO PROTECTOR CÁRTER / CHASIS TRIAL / BUSHING		BT280310883	BT280310883	-	BT280310883	2
31	PLACA PROTECCIÓN MOTOR / TRIAL ENGINE PROTECTOR PLATE		BT280210005	BT280210005	-	BT280210005	1
32	ULS 8X16 / ULS 8X16		T0508016	T0508016	-	T0508016	2
33	SOPORTE CABALLETE TRIAL 2000 / SIDE STAND BRACKET SUPPORT		BT280712023	BT280712023	-	BT280712023	1

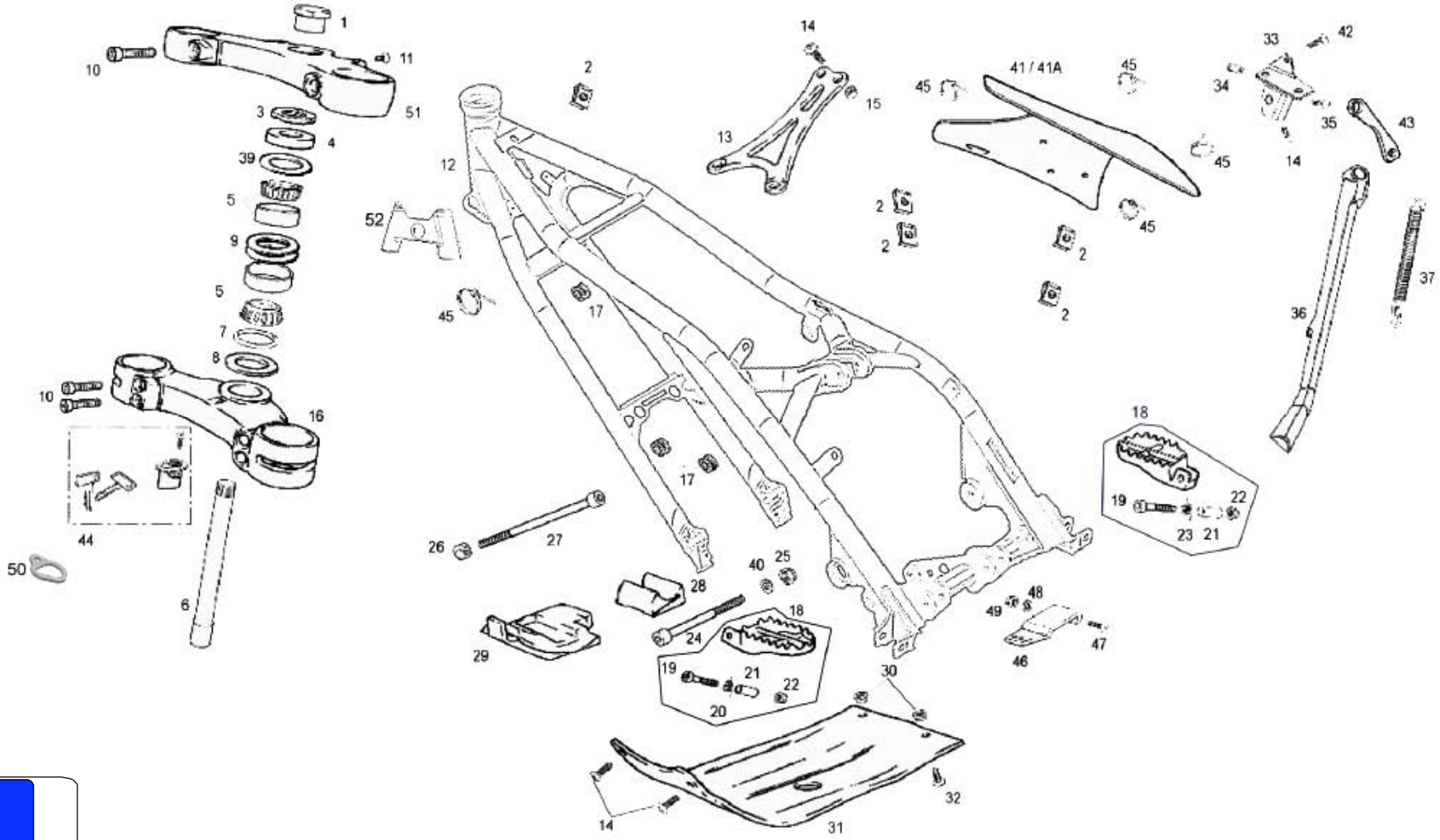
1
10
11
51
3
4
39
5
9
5
7
8
10
16
44
50
6
2
12
52
45
17
14
13
15
41 / 41A
45
45
45
2
2
2
2
33
42
34
35
43
14
36
37
18
19
22
23
21
26
27
40
25
28
24
18
29
19
21
22
20
30
49
48
46
47
14
31
32

Nº	DESCRIPCION / DESCRIPTION	USA	125 RACING	125 / 200	250 / 280 / 300	Cant.
34	CASQUILLO GUÍA CABALLETE TRIAL / BUSH, PIVOT SIDE STAND	BT27712011	BT27712011	-	BT27712011	1
35	ALLEN 8X14 / 8X14 ALLEN BOLT	T0308014	T0308014	-	T0308014	1
36	CABALLETE TRIAL 99 / SIDE STAND BRACKET	BT280712010	BT280712010	-	BT280712010	1
37	MUELLE CABALLETE / SIDE STAND SPRING	BT280310039H	BT280310039H	-	BT280310039H	1
39	ARANDELA 22.4X36X0.7 REGLAJE / REGULATE WASHER	T4022036	T4022036	-	T4022036	1
40	ARANDELA GLOBER 10X15 / GLOBER WASHER	T4001015	T4001015	-	T4001015	1
41	GOMA PROTECCIÓN CAJA-CHASIS CORTA TRIAL PRO / SHORT PROTECT RUBBER	BT280236033	BT280236033	-	BT280236033	1
41A	GOMA PROTECCIÓN CAJA-CHASIS LARGA TRIAL PRO / LONG PROTECT RUBBER			BT280236034	BT280236034	1
42	HEXAGONAL 6X16 / 6X16 HEXAGONAL BOLT	T0106016	T0106016	-	T0106016	1
43	EXCÉNTRICA CABALLETE TRIAL HOMO. / ADJUSTER	BT280312025H	BT280312025H	-	BT280312025H	1
44	CTO. BLOQUEO CLAUSOR / LOCKING CLAUSOR SET	BT280210075	BT280210075	-	BT280210075	1
45	BRIDA UNEX 2244 4.8X20 / 4.8X20 BLACK CLAMP	BE25634009	BE25634009	-	BE25634009	3
46	PROTECTOR CADENA A CHASIS / CHAIN PROTECTOR	BT280212026	BT280212026	-	BT280212026	1
47	TORNILLO ULS 6X25 / ULS 6X25	T0506025	T0506025	-	T0506025	1
48	ARANDELA PLANA 6.5X16X1.5 / WASHER 6.5X16X1.5	T4006016	T4006016	-	T4006016	1
49	TUERCA AUTOBLOCANTE DIN-6926 M6 CON ARANDELA ZN / NUT NYLOCK	T2206002	T2206002	-	T2206002	1
50	PLATINA TAPA CLAUSOR / CLAMP COVER	BT280210077/1	BT280210077/1	BT280210077/1	BT280210077/1	1
51	PLATINA SUPERIOR / UPPER CLAMP	BT220002809	BT220002809	BT220002809	BT220002809	1
52	TOPE DIRECCION CHASIS / GEAR PROTECTION RUBBER	BT170002809	BT170002809	BT170002809	BT170002809	1

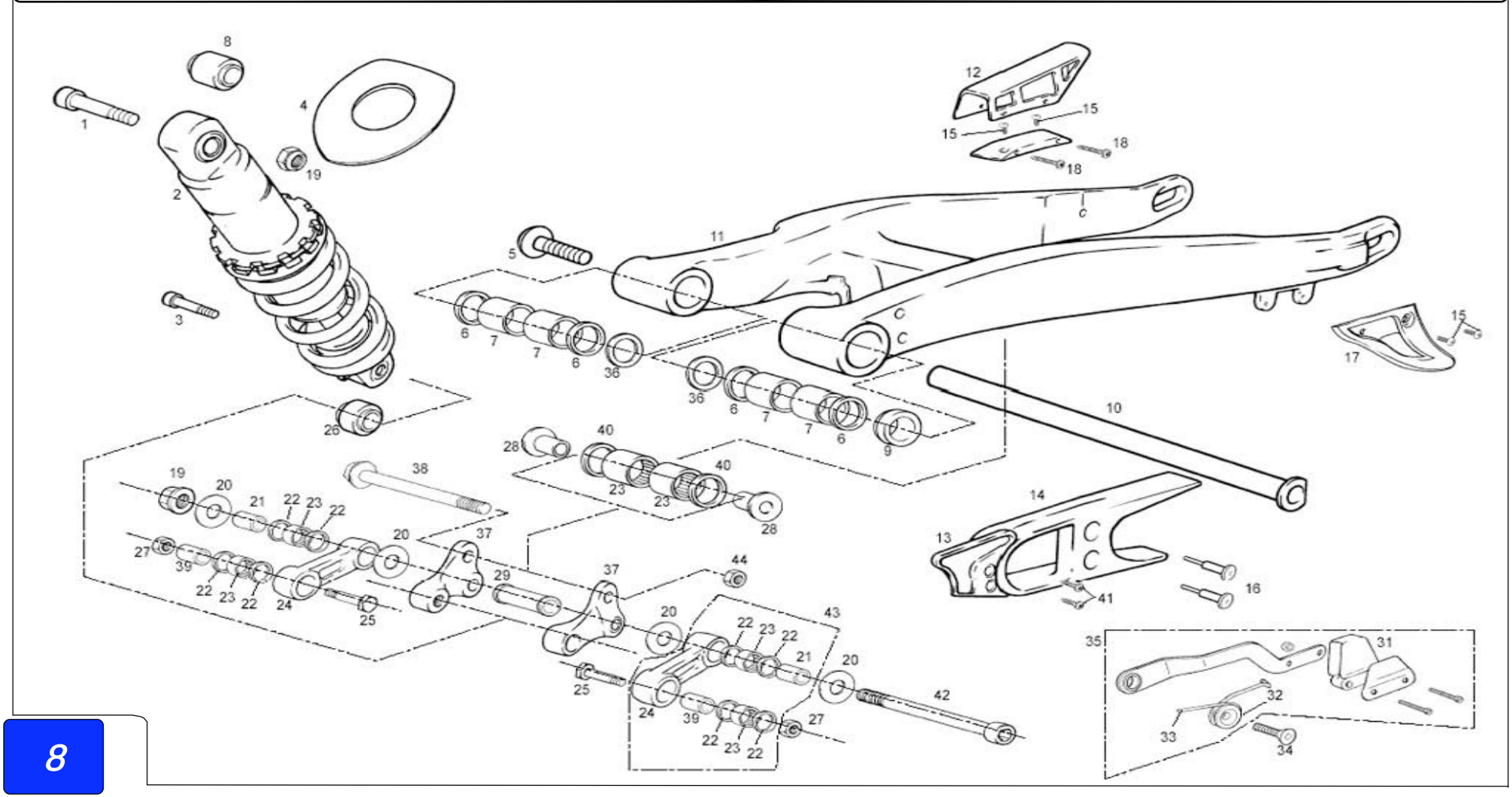
1
2
3
4
5
6
7
8
9
10
11
12
13
14
15
16
17
18
19
20
21
22
23
24
25
26
27
28
29
31
32
33
34
35
36
37
38
39
40
41
42
43
44

Nº	DESCRIPCION / DESCRIPTION	USA	125 RACING	125 / 200	250 / 280 / 300	Cant.
1	ALLEN 10X55 / 10X55 ALLEN SCREW	T0301055	T0301055	T0301055	T0301055	1
2	AMORTIGUADOR TRIAL / SHOCK ABSORBER	BT300002809	BT300002809	BT300002809	BT300002809	1
3	TORNILLO ESPECIAL / SPECIAL SCREW	T0310046	T0310046	T0310046	T0310046	1
4	GOMA PROTECCIÓN AMORTIGUADOR TRASERO / REAR SHOCK PROTECTOR	BT280236041	BT280236041	BT280236041	BT280236041	1
5	TORNILLO EJE BASCULANTE TRIAL / SWING-ARM AXLE SCREW	BT280212009	BT280212009	BT280212009	BT280212009	1
6	RETÉN 20-26-4 870 N BASCULANTE / 20-26-4 OIL SEAL	C220001	C220001	C220001	C220001	4
7	COJINETE / BEARING	BT280212032	BT280212032	BT280212032	BT280212032	4
8	SILENTBLOCK AMORTIGUADOR / REAR SHOCK ABSORVER SILENTBLOCK	BT280414305	BT280414305	BT280414305	BT280414305	1
9	CASQUILLO GUÍA EJE BASCULANTE / SWING-ARM AXLE BUSHING	BT280212108	BT280212108	BT280212108	BT280212108	1
10	EJE BASCULANTE TRIAL / SWING-ARM AXLE	BT280412008	BT280412008	BT280412008	BT280412008	1
11	BASCULANTE TRIAL / TRIAL 2002 SWING-ARM	BT280712002	BT280712002	BT280712002	BT280712002	1
12	CUBRECADENAS / CHAIN COVER	BT280428011	BT280428011	BT280428011	BT280428011	1
13	PROTECTOR PIÑÓN TRIAL 2002 / PINION PROTECTOR	BT280236021	BT280236021	BT280236021	BT280236021	1
14	PATÍN CADENA / CHAIN GUIDE	BT280412015	BT280412015	BT280412015	BT280412015	1
15	ULS 5X12 / 5X12 ULS	T0505012	T0505012	T0505012	T0505012	4
16	REMACHE CABOTA GRANDE 14X4 8X21 PATÍN / RIVET	T4505016	T4505016	T4505016	T4505016	2
17	PROTECTOR CORONA TRIAL 2003 / SPROCKET PROTECTOR	BT280320029	BT280320029	BT280320029	BT280320029	1
18	TORNILLO ROSCA CHAPA PHILIPS 4X38 / 4X38 PHILIPS SCREW	T0614838	T0614838	T0614838	T0614838	2
19	TUERCA AUTOBLOCANTE / SELF-LOCKING NUT	T2110001	T2110001	T2110001	T2110001	2
20	ARANDELA REGLAJE 10.5X26X0.5 / 10.5X26X0.5 WASHER	T4001026	T4001026	T4001026	T4001026	4
21	CASQUILLO SUSPENSIÓN DIAM. 10 / SUSPENSION BUSHING	BT27712005	BT27712005	BT27712005	BT27712005	2
22	RETÉN 15X21X2 / 15X21X2 OIL SEAL	C230001	C230001	C230001	C230001	8
23	COJINETE AGUJAS 15BM2116 / NEEDLE BEARING	BT27714009	BT27714009	BT27714009	BT27714009	6
24	BIELETA ALUMINIO TRIAL 2000 / ALUMINIUM ROD	BT280014008	BT280014008	BT280014008	BT280014008	2
25	TORNILLO ESPECIAL BIELETA 8X38 / 8X38 SPECIAL SCREW	T0118038	T0118038	T0118038	T0118038	2
26	RÓTULA AMORTIGUADOR / BALL AND SOCKET JOIN	BT280214300	BT280214300	BT280214300	BT280214300	1
27	TUERCA AUTOBLOCANTE M8 ALTA / SELF-LOCKING NUT	T2108002	T2108002	T2108002	T2108002	2
28	CASQUILLO BALANCÍN 99 / ARTICULATION BUSHING	BT27914014	BT27914014	BT27914014	BT27914014	2
29	CASQUILLO DISTANCIADOR BALANCÍN / ARTICULATION SPACER BUSHING	BT27914016	BT27914016	BT27914016	BT27914016	1
31	GOMA TENSOR CADENA / TENSIONER CHAIN RUBBER	G180010	G180010	G180010	G180010	1
32	CASQUILLO TENSOR CADENA / CHAIN TENSIONER BUSHING	B560000	B560000	B560000	B560000	1
33	MUELLE TENSOR CADENA / CHAIN TENSIONER SPRING	M122000	M122000	M122000	M122000	1
34	ALLEN CONICO 8X30 TENSOR CADENA / 8X30 CONIC ALLEN	T0408030	T0408030	T0408030	T0408030	1

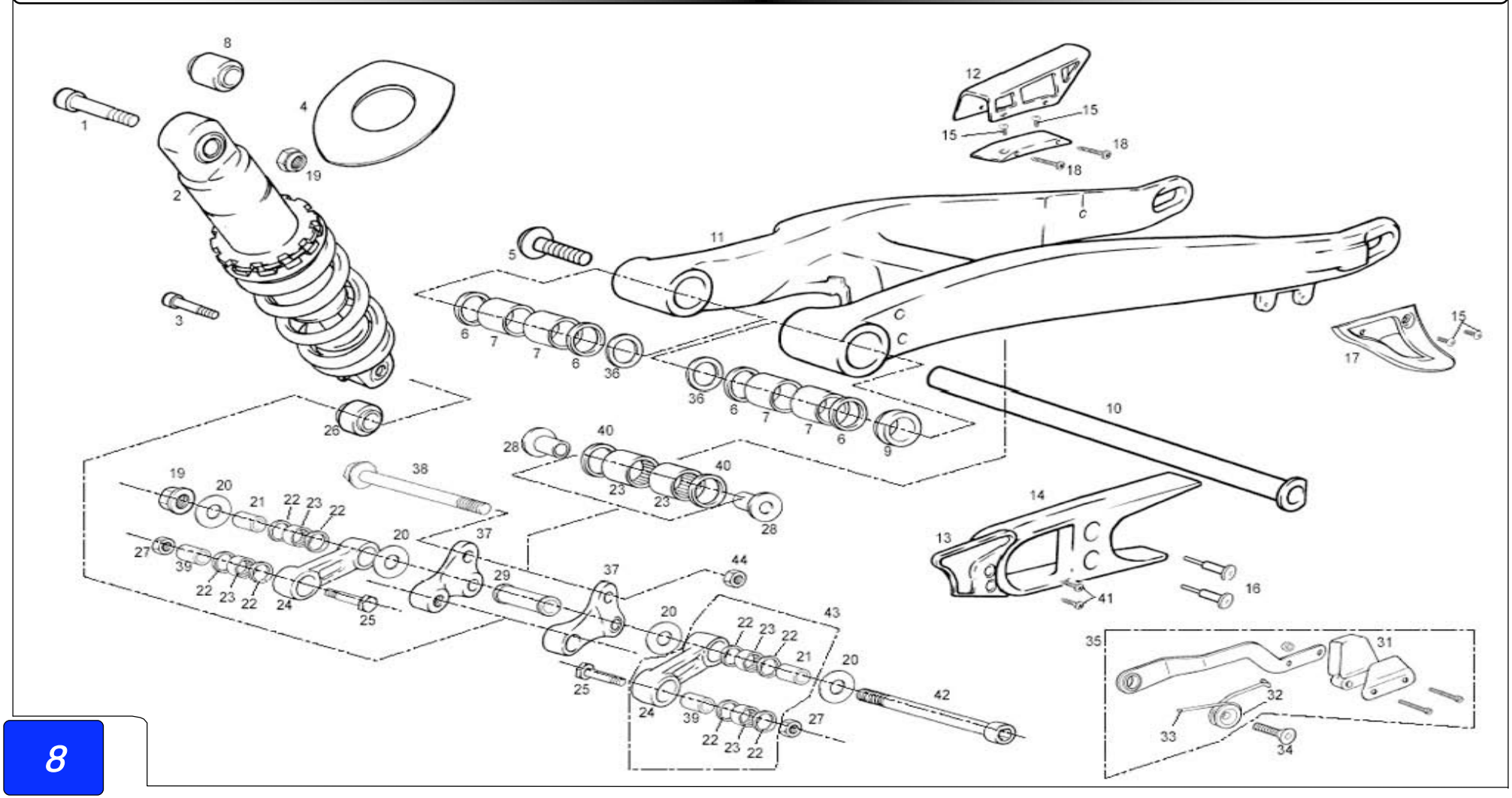
1
2
3
4
5
6
7
8
9
10
11
12
13
14
15
16
17
18
19
20
21
22
23
24
25
26
27
28
29
31
32
33
34
35
36
37
38
39
40
41
42
43
44

Nº	DESCRIPCION / DESCRIPTION	USA	125 RACING	125 / 200	250 / 280 / 300	Cant.
35	CTO. TENSOR CADENA TRIAL / CHAIN TENSIONER ASSY.	BT280410078	BT280410078	BT280410078	BT280410078	1
36	ARANDELA BASCULANTE TRIAL 2002 / SWING-ARM WASHER	BT280212007	BT280212007	BT280212007	BT280212007	2
37	CTO. BALANCÍN TRIAL 2000 / ROCKER-ARM SET	BT280014005CT	BT280014005CT	BT280014005CT	BT280014005CT	1
38	TORNILLO ESPECIAL M10X80X1.25 12.9 / M10X80X1.25 SCREW	T0210080	T0210080	T0210080	T0210080	1
39	CASQUILLO SUSPENSIÓN DIAM.8 / DIAM. 8 SUSPENSION BUSHING	BT27712014	BT27712014	BT27712014	BT27712014	2
40	RETÉN 15-21-3-8170N BASC. BAL. / 15-21-3-8170N OIL SEAL	C230000	C230000	C230000	C230000	2
41	TORNILLO ROSCA-CHAPA 4.2X12 / 4,2X12 SCREW	T259349	T259349	T259349	T259349	2
42	ALLEN M10X120 / M10X120 ALLEN	T0310121	T0310121	T0310121	T0310121	1
43	BIELETA ALUMINIO TRIAL COMPLETA / ALUMINIUM ROD SET	BT280014008CT	BT280014008CT	BT280014008CT	BT280014008CT	2
44	TUERCA M10 / M10 NUT	T3110002	T3110002	T3110002	T3110002	1

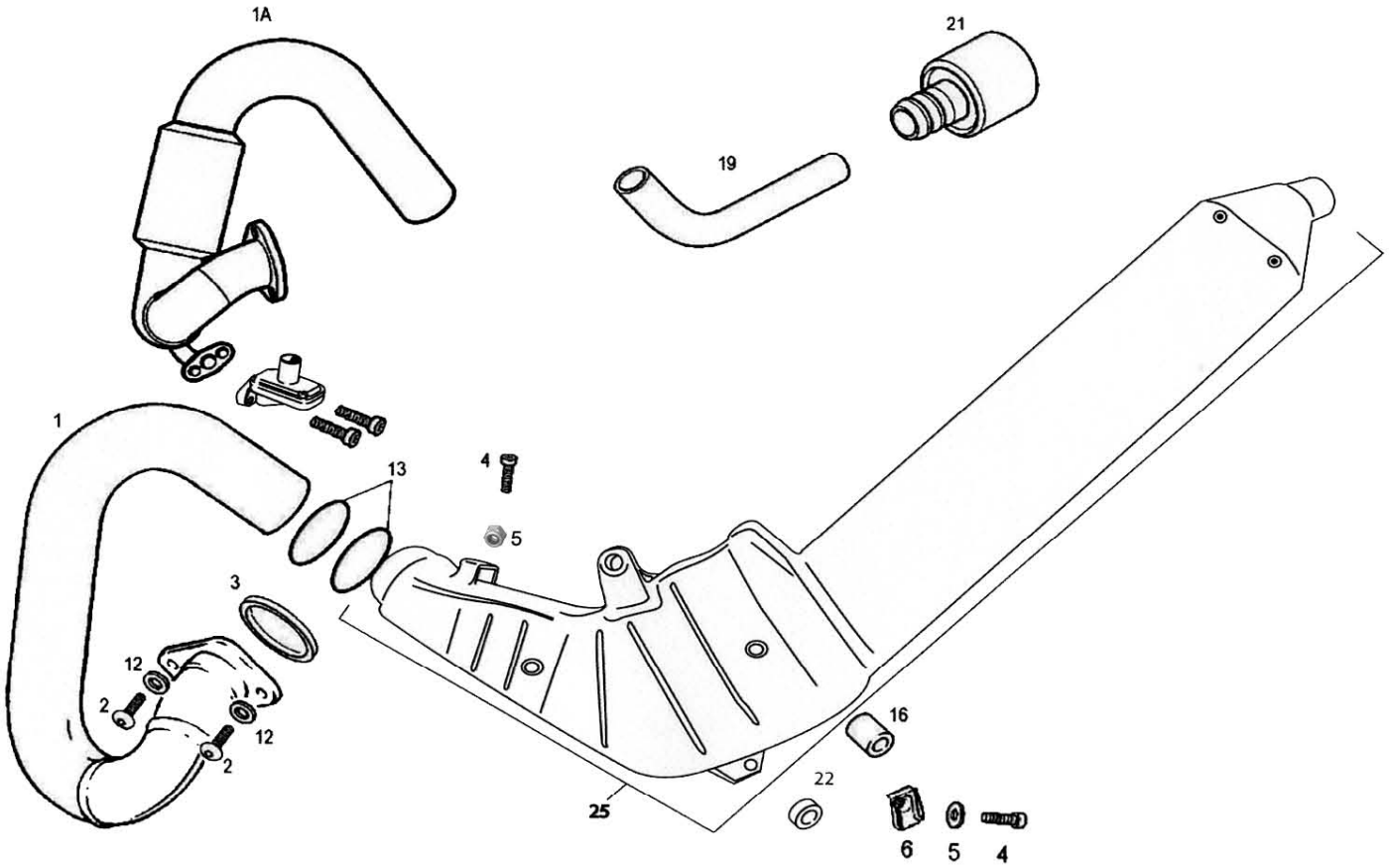
1A
21
19
1
13
4
5
3
12
2
12
2
16
22
25
6
5
4

Nº	DESCRIPCION / DESCRIPTION	125 / 200 /250	280 / 300	Cant.
1	CURVA ESCAPE TRIAL SXXI / TRIAL BEND EXHAUST SXXI	BT85000H2808	BT85000H2808	1
1A	CURVA ESCAPE HOMOLOGADA / HOMOLOGATED BEND EXHAUST	-	BT280626001H	1
2	ULS 8X16 / 8X16 ULS	-	T0508016	2
3	JUNTA ESCAPE S4 105 / EXHAUST GASKET	-	MT280244012	1
4	TORNILLO ESP. 6X14 / SPECIAL SCREW 6X14	-	T0206014	1
5	TUERCA CON ARAND. ESTRIADA M6 / M6 NUT WITH WASHER	-	T2206000	1
12	ARANDELA GROVER 8X12X2 / GROVER WASHER	-	T4008314	2
13	TÓRICA SILENCIOSO INTERMEDIO 44,05X3,53 / O'RING INT. SILENCER	-	C290000	2
14	CAZOLETA SILENCIOSO FINAL / FINAL EXHAUST COVER	-	BT280126100	1
16	CASQUILLO SEPARADOR MOTOR EC125 / BUSHING		BE120110065	1
19	TUBO AIRE SECUNDARIO DE ESCAPE A VÁLVULA / SECONDARY AIR HOSE FROM EXHAUST TO VALVE	-	BT280626061	1
21	FILTRO AIRE SECUNDARIO / SECONDARY AIR FILTER	-	BT280626059	1
22	CASQUILLO INF. ESCAPE TRIAL / LOWER EXHAUST BUSHING TRIAL	-	BT280226240	1
23	ABRAZADERA 8X15 / 8X15 CLIP	-	BQ300214157	4
24	ULS 6X14 ARANDELA INC./ WASHER INC ULS 6X14	-	T0556014	2
25	CTO. INTERM. Y FINAL (FINAL PULIDO SCOTCH) / INTERMEDIATE AND FINAL SET (FINAL SCOTCH POLISHED)	-	BT860002809	1

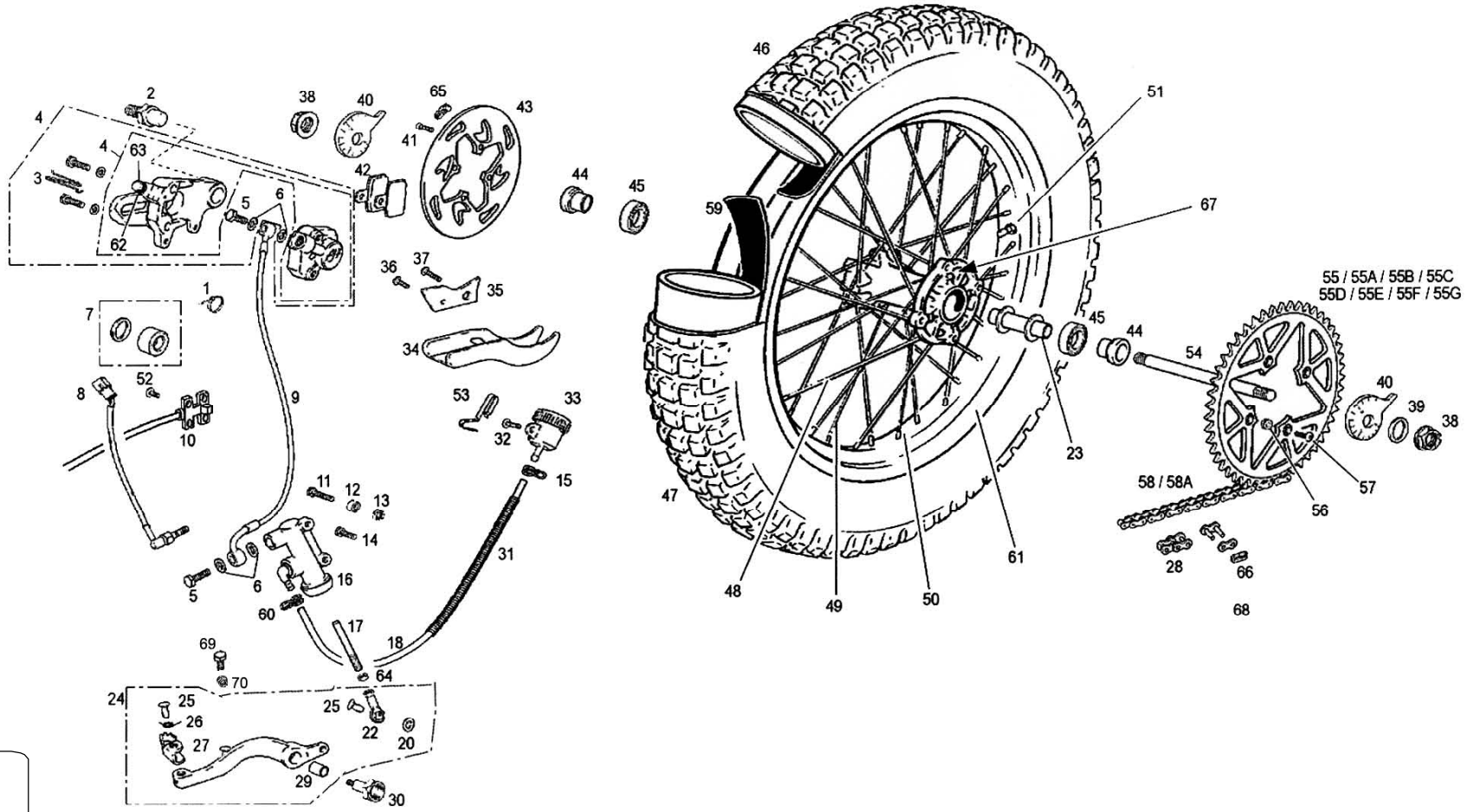
55 / 55A / 55B / 55C
55D / 55E / 55F / 55G
58 / 58A

Nº	DESCRIPCION / DESCRIPTION	125	200	250 / 280	300	Cant.
1	BRIDA UNEX CORTA 2221-0 2,5X98 / 0 2.5X98 / CABLE TIES 2.5X98	-	-	BE25634010	-	1
2	CASQUILLO CENTRADOR PINZA / SPACER BUSHING	-	-	BT280222049	-	1
3	CHAVETA SUJECIÓN PASTILLA / KEY SPACER BRAKE PADS	-	-	R250000	-	1
4	PINZA FRENO TRASERA / CALIPER BRAKE REAR	-	-	BT280222001	-	1
5	TORNILLO LATERAL BOMBA FRENO TRASERO / BOLT PRESSURE HOSE	-	-	R320000	-	2
6	ARANDELA AL. 10X14X1.5 / WASHER 10X14X1.5	-	-	BT280422007	-	4
7	KIT REPARACIÓN PINZA FRENO / REPAIR KIT BRAKE PAD	-	-	BT280222202	-	1
8	INTERRUPTOR STOP HOMOLOGADO / STOP INTERRUPTOR HOMOL.	-	-	BEP250234003	-	1
9	LATIGUILLO FRENO TRASEO / REAR BRAKE HOSE	-	-	BT280222004	-	1
10	REENVÍO / HALL SENSOR	-	-	BT280634050	-	1
11	TORNILLO 6X25 / 6X25 BOLT	-	-	T0206025	-	1
12	CASQUILLO SEPARADOR FRENO TRASERA / REAR BRAKE PUMP SPACER	-	-	BT280226240	-	1
13	TUERCA CON ARANDELA M6 (DIN 6923) ESTRIADA / M6 NUT WITH WASHER	-	-	T2206000	-	2
14	TORNILLO ESPECIAL 6X14 / 6X14 SPECIAL SCREW	-	-	T0206014	-	1
15	ABRAZADERA ELÁSTICA ALAMBRE / ELLASTIC SPRING	-	-	L200036	-	2
16	BOMBA FRENO TRASERO / REAR BRAKE PUMP	-	-	BT280222010	-	1
17	VARILLA FRENO TRASERA TRIAL 2002 / BRAKE ROD	-	-	BT280222062	-	1
18	TUBO SOBRANTE RAD. 5X8 (39cm) / RADIATOR HOSE 5X8 (39cm).	-	-	BE25632009	-	1
20	ARANDELA PLANA 6X12X1.5 / WASHER 6X12X1.5	-	-	T4006012	-	1
22	RÓTULA PEDAL FRENO / BRAKE PEDAL BALL-AND-SOCKET JOINT	-	-	BT280222053	-	1
23	CASQUILLO SEPARADOR 390.80.221 / BUSHING	-	-	BT280218052	-	1
24	CTO. PEDAL FRENO TRASERO / REAR BRAKE PEDAL SET	-	-	BT13000CT2809	-	1
25	REMACHE PUNTERA PEDAL FRENO / BRAKE PEDAL END RIVET	-	-	BE25922018	-	2
26	MUELLE PUNTERA PEDAL / SPRING PEDAL, END GEAR CLEVER	-	-	ME25636029	-	1
27	PUNTERA PEDAL FRENO / TOE PEDAL BRAKE	-	-	BT27922017	-	1
28	ENGANCHE CADENA IRIS 520 RXL / CHAIN SPLIT LINK	-	-	BT280310066	-	1
29	GLACIER PEDAL FRENO 1215PD10 / GLACIER BRAKE PEDAL	-	-	C200101	-	1
30	CASQUILLO TORNILLO PEDAL FRENO TRIAL / SCREW BUSHING	-	-	BT280610302	-	1
31	MUELLE DESVAPORIZADOR / SPRING BREATHER	-	-	M150000	-	1
32	ULS 6x14 CON ARANDELA / 6X14 ULS WITH WASHER	-	-	T0556014	-	1
33	DEPÓSITO LÍQUIDO FRENOS / BRAKE LIQUID TANK	-	-	BT280410016	-	1

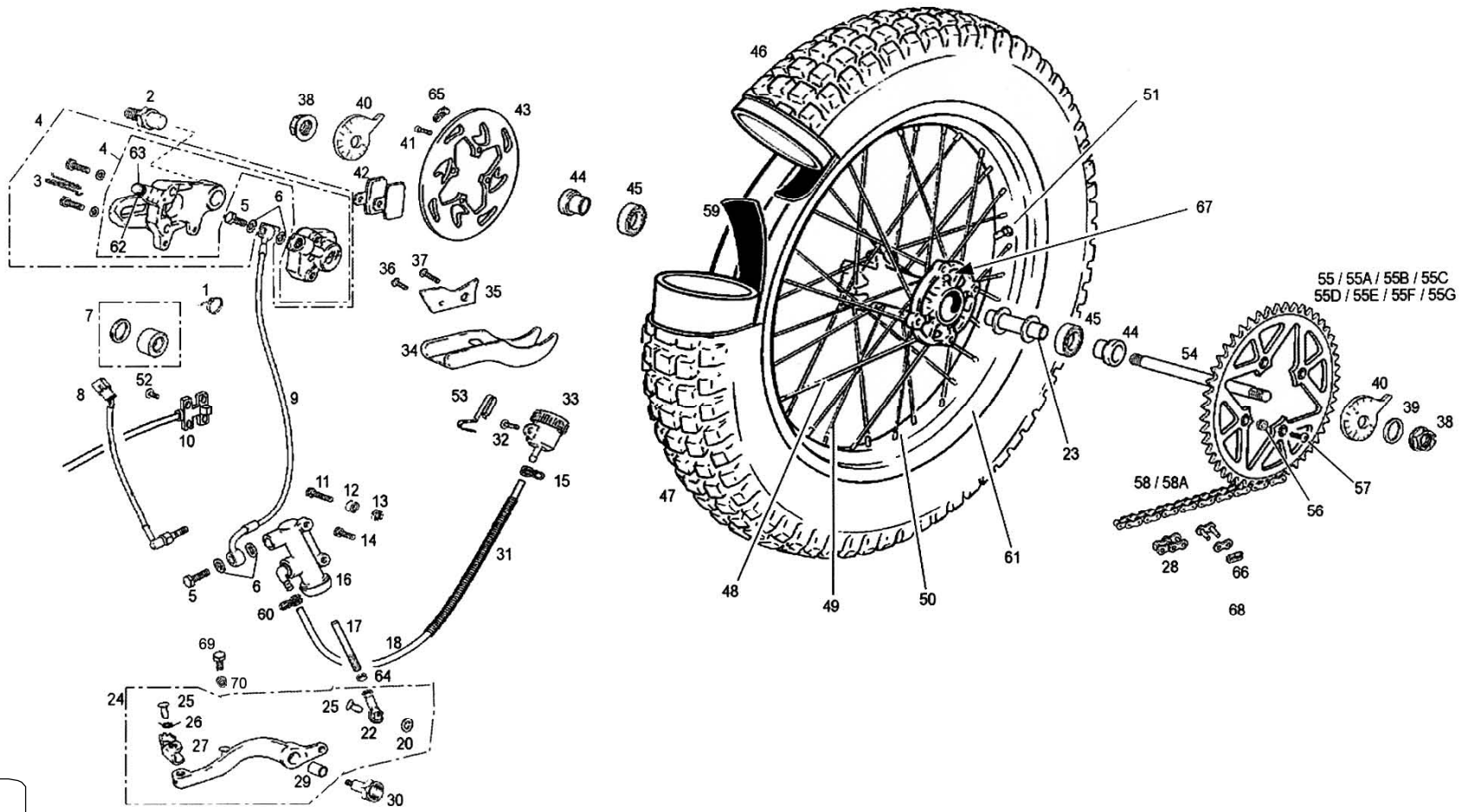
55 / 55A / 55B / 55C
55D / 55E / 55F / 55G
58 / 58A

Nº	DESCRIPCION / DESCRIPTION	125	200	250 / 280	300	Cant.
34	PROTECTOR DISCO TRASERO 2001 / BRAKE DISC PROTECTOR	-	-	BT280128012	-	1
35	SOPORTE PROTECTOR DISCO TRASERO / BRAKE DISC PROTECTOR SUPPORT	-	-	BT280222051	-	1
36	ULS 5X12 / 5X12 ULS	-	-	T0505012	-	1
37	TORNILLO ULS 6X20 / 6X20 ULS BOLT	-	-	T0506020	-	1
38	TORNILLO EJE RUEDA TRASERA / REAR WHEEL AXLE BOLT	-	-	BT280718023	-	2
39	ARANDELA EJE TRASERO 17X30X1,5 DIN 137 / REAR WASHER	-	-	BT280436014	-	1
40	EXCÉNTRICA TRASERA IZQ. / LEFT REAR SAIL CAM ADJUSTER	-	-	BT280718022L	-	2
41	ALLEN 6X18 / 6X18 SCREW	-	-	T0206020	-	4
42	PASTILLA FRENO TRASERA / REAR BRAKE PADS	-	-	BT280222068	-	2
43	DISCO FRENO TRASERO TRIAL 2003 / REAR BRAKE DISK	-	-	BT280322012	-	1
44	DISTANCIADOR RUEDA TRASERA 7.5MM / REAR SPACER WHEEL	-	-	BT280218021	-	2
45	COJINETE 6004 / BEARING	-	-	C160001	-	2
46	CUBIERTA TRASERA 400X18 TBLS / REAR WHEEL TYRE	-	-	N200100	-	1
47	RUEDA TRASERA TRIAL / TRIAL REAR WHEEL	BT55000CT2808	BT55000CT2808	BT55000CT2808	BT5500CT2808	1
48	RADIO 3.4X220 RUEDA TRASERA TRIAL / REAR SPOKE	-	-	BRT500118014	-	16
49	RADIO 3.4X215 RUEDA TRASERA TRIAL / REAR SPOKE	-	-	BRT500118015	-	16
50	TUERCA RADIOS 3.5MM. RUEDA TRASERA / REAR SPOKE NUT	-	-	BT27718016	-	32
51	VÁLVULA / AIR VALVE	-	-	N200110	-	1
52	ULS 6X10 / 6X10 ULS	-	-	T0506010	-	1
53	SOPORTE DEPÓSITO LÍQUIDO DE FRENO / BRAKE FLUID TANK SUPPORT	-	-	BT280410943	-	1
54	CTO. EJE RUEDA TRASERA CON EXCENTRICA / REAR WHEEL AXLE SET WITH CAM ADJUSTER	-	-	BT280718020CT	-	1
55	CORONA TRIAL SXX1 / SPROCKET	-	-	BT280218034	-	1
55A	CORONA Z43 / SPROCKET	-	-	BT280218024	-	1
55B	CORONA Z41 / SPROCKET	-	-	BT280318024	-	1
55C	CORONA Z44 / SPROCKET	-	-	BT120218034	-	1
55D	CORONA Z46 / SPROCKET	-	-	BT200218034	-	1
55E	CORONA Z48 / SPROCKET	-	-	BT120518034	-	1
55F	CORONA Z42 GOLD / SRPOCKETT	-	-	BT280218034AM	-	1
55G	CORONA RENTHAL / RENTHAL SPROCKET	-	-	BT280718034	BT280718034	1
56	TUERCA AUTOBLOCANTE M8 BAJA / LOW SELF-LOCK NUT	-	-	T2108001	-	1
57	ULS 8X20 PLAT. PROT. / 8X20 ULS	-	-	T0508022	-	1
58	CADENA TRIAL / TRIAL CHAIN	-	-	BT280310036	-	1
58A	CADENA TRIAL 520 RXL 104 PASOS / CHAIN	-	-	BT120210036	-	1

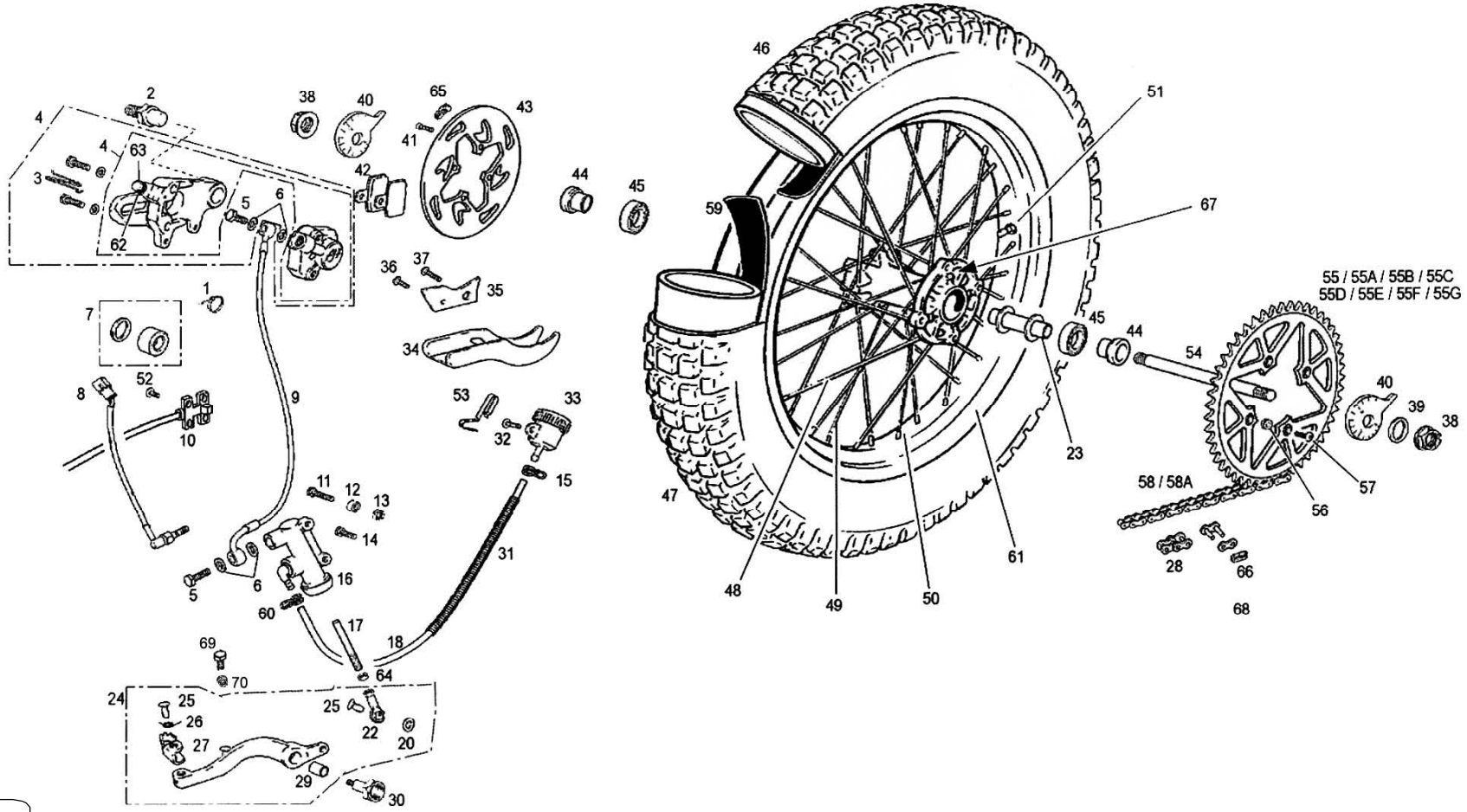
55 / 55A / 55B / 55C
55D / 55E / 55F / 55G
58 / 58A

Nº	DESCRIPCION / DESCRIPTION	125	200	250 / 280	300	Cant.
59	FLAP LLANTA TRASERA / REAR RIM FLAP	-	-	BT551502808	-	1
60	ABRAZADERA BLANCA / WHITE CLAMP	-	-	BT27710120	-	1
61	LLANTA RUEDA TRASERA / REAR WHEEL RIM	-	-	BRT500118011	-	1
62	SANGRADOR / BLEEDER	-	-	BE25622060	-	1
63	TAPÓN SANGRADOR / BLEEDER CAP	-	-	BT27922055	-	1
64	TUERCA M6 BAJA DIN 934 / M6 NUT	-	-	T2006001	-	1
65	IMÁN 2221-0 2.5X98 / MAGNET	-	-	BT280234012	-	1
66	MEDIA MALLA IRIS 520 RXL / IRIS 520 RXL AVERAGE MESH	-	-	BT280310067	-	1
67	CUBO RUEDA TRASERA / REAR WHEEL HUB	-	-	BT280218027	-	1
68	CTO. MUELLE + ENGANCHE TRIAL 125 / SPRING + 125 TRIAL HOOK SET	BT120710066	-	-	-	1
69	TORNILLO HEXAGONAL 5X10 // HEXAGONAL SCREW M5X10	-	-	T0105010	-	1
70	TUERCA M5 / NUT M5 NORMAL	-	-	T2005000	-	1

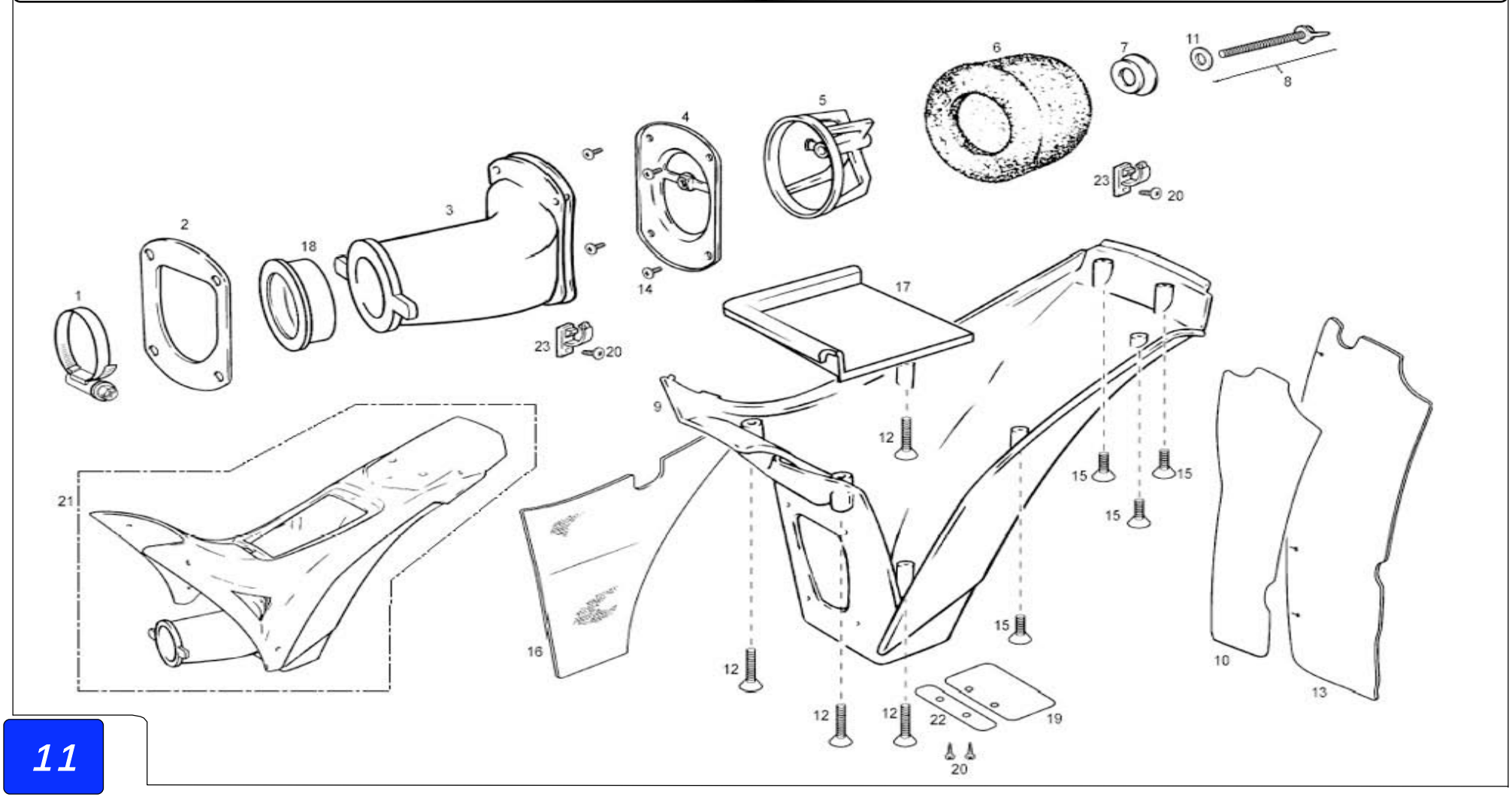
1
2
18
3
4
5
6
7
11
8
23
20
14
17
9
12
15
21
16
10
13
22
19

Nº	DESCRIPCION / DESCRIPTION	250 / 280 RO	280 AZ	Cant.
1	ABRAZADERA S56/9 / CLAMP	MT280316132	-	1
2	PLATINA EXTERIOR SOPORTE JAULA FILTRO TRIAL 2002 / EXTERNAL PLATE	BT280228021	-	1
3	TOBERA CAJA FILTRO TRIAL SXXI / TUBE, AIR CLEANER CONNECT.	BT280328017	-	1
4	PLATINA INTERIOR SOPORTE JAULA FILTRO TRIAL 2002 / INNER PLATE	BT280228020	-	1
5	JAULA FILTRO AIRE TRIAL 280-2002 / AIR CLEANER CAGE	BT280228002	-	1
6	FILTRO AIRE TRIAL XXI / AIR CLEANER	BT280328000	-	1
7	TETÓN ESPUMA FILTRO TRIAL 2002 / AIR CLEANER WASHER	BT280228008	-	1
8	VARILLA FILTRO TRIAL 2002 / AIR CLEANER ROD	BT280228003	-	1
9	CAJA FILTRO TRIAL 2003 / AIR CLEANER BOX	BT280228001	-	1
10	AD. PROTECTOR CAJA FILTRO / AIR CLEANER PROTECTOR SITCKER	BT280428024	-	1
11	ARANDELA / WASHER	T4006016	-	1
12	TORNILLO ROSCA-CHAPA 3,5X30 / 3,5X30 SCREW THREAD	BT280228034	-	4
13	GOMA PROTECCIÓN CAJA FILTRO / AIR CLEANER BOX PROTECTOR RUBBER	BT280420008	-	1
14	ULS 4X10 NEGRO CON ABRAZADERA / ULS 4X10 BOLT	T0554010N	-	4
15	TORNILLO ROSCA-CHAPA 3,5X12 / 3,5X12 SCREW THREAD	BT280228035	-	4
16	ADH. PROTECTOR ESCAPE AMIANTO / EXHAUST PROTECTOR STICKER	BT280238059	-	1
17	GOMA PROTECCIÓN ESPUMA FILTRO / AIR CLEANER PROTECTOR	BT280328036	-	1
18	ADAPTADOR CARBURADOR / CARBURETOR ADAPTER	BT250328040	-	1
19	VÁLVULA VACIADOR CAJA FILTRO TRIAL / TRIAL FILTER BOX VALVE	BT280428032	-	1
20	TORNILLO ROSCA-CHAPA 4,2X10 NEGRO / BLACK 4,2X10 SCREW	T0604210	-	4
21	CTO. CAJA FILTRO TRIAL PRO 2009 / PRO FILTER BOX SET	BT79000CT2809	BT79000AZCT2809	1
22	PISADOR VÁLVULA VACIADOR CAJA FILTRO / BOX VALVE SUJECTION	BT280428045	-	1
23	PRENSACABLES SR1789 / CABLE TIE SR1789	BT280428006	-	2

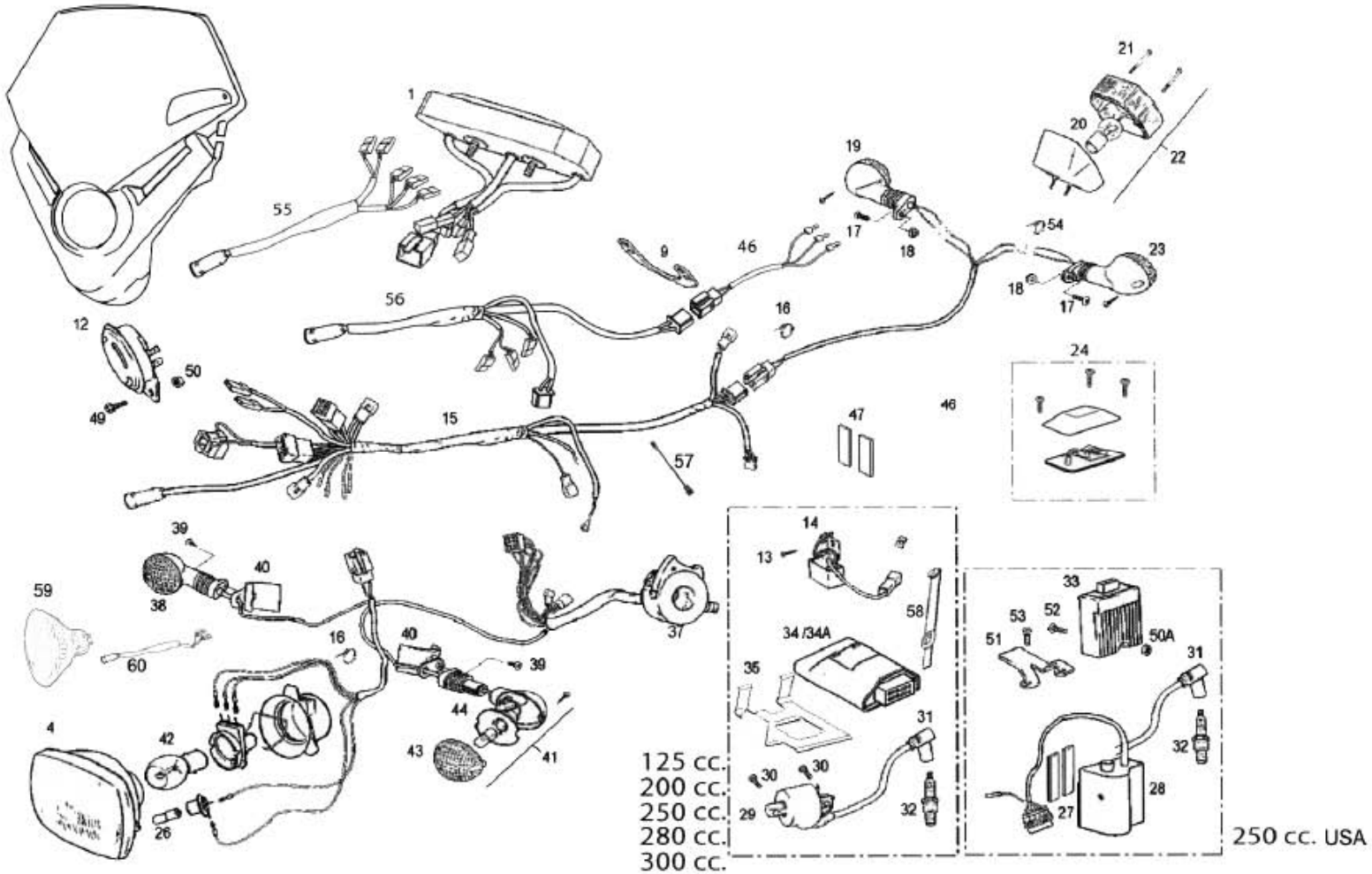
125 cc.
200 cc.
250 cc.
280 cc.
300 cc.
250 cc. USA

Nº	DESCRIPCION / DESCRIPTION	USA	125 RACING	125 / 200 / 280 /300	250	Cant.
1	MULTIFUNCIÓN TRIAL / TRIAL MULTIFUNCTION		-	ET600002808	-	1
7	BOMBILLA 12V 1,2-9W / 12V 1,2-9W BULB		L300123	L300123	L300123	3
9	SOPORTE CUENTA KM. / KM. COUNTER SUPPORT		-	-	BT280634045	1
12	CTO. CLAXON PE40065G11 / HORN ASSY		L300105	-	L300105	1
13	TORNILLO ESPECIAL 6X14 / 6X14 SPECIAL SCREW	T0206014	T0206014	T0206014	-	1
14	REGULADOR ALTERNADOR / ALTERNATOR REGULATOR	L300031	L300031	L300031	-	1
15	INSTALACIÓN TRIAL / TRIAL INSTALLATION		BT280634014	BT280634014	BT280634014	1
16	BRIDA UNEX MEDIANA / UNEX CLAMP	BE25634009	BE25634009	-	BE25634009	3
17	ULS 6X16 NEGRO / 6X16 ULS BLACK BOLT		T0506016N	-	T0506016N	2
18	TUERCA CON ARANDELA M6 / M6 NUT WITH WASHER		T2206000	-	T2206000	2
19	INTERMITENTE DERECHO TRASERO / RIGHT REAR INDICATOR		-	BT280634018	-	1
20	BOMBILLA 12V 5-21W / 12V 5-21W BULB		L300116	-	L300116	1
21	CRISTAL FARO TRASERO HOMOLOGADO / HOMOL. REAR LIGHT CAP		BP25734115	-	BP25734115	1
22	FARO PILOTO TRIAL HOMOLOGADO / HOMOL. TRIAL REAR LIGHT SET		BP27534015	-	BP27534015	1
23	INTERMITENTE IZQUIERDO TRASERO / LEFT REAR INDICATOR		-	BT280634019	-	1
24	FARO PILOTO TRIAL / TRIAL REAR LIGHT SET	EE300002808	EE300002808	-	EE300002808	1
25	TORNILLO ROSCA CHAPA 3.5X13 / BOLT 3.5X13	T0603513	T0603513	-	T0603513	3
26	LÁMPARA 12V3W BIFARO AM0518 / 12V 3W LAMP		L300119	-	L300119	1
27	TIRA ADHESIVA 45MM. CAJA FILTRO EC2003 / STICKER 45MM.			-	BE250328039	2
28	CTO. CDI 432 40 2402 TRIAL PRO RACING / CDI 432			-	MT250734007CT	1
29	BOBINA KOKUSAN IG3815 / KOKUSAN ELECTRIC COIL	M02812110	M02812110	M02812110	-	1
30	ALLEN 6X16 / ALLEN 6X16 BOLT	T0306016	T0306016	T0306016	-	3
31	PIPA BUJÍA IB05EMH = BT27934000 / SPARK PLUG	BT280634000	BT280634000	-	BT280634000	1
32	BUJÍA BPR5ES / SPARK PLUG	M04012000	M04012000	-	M04012000	1
33	REGULADOR RECTIFICADOR DUCATI / REGULATOR				MT300534009	1
34	CDI DIGITAL CU77516 TRIAL 125/200 2005 / TRIAL 2005 DIGITAL CDI	MT120534007 (125,200)	MT120534007 (125,200)	MT120534007 (125,200)		1
34A	CDI DIGITAL CU7510 TRIAL 250/280 2005 / TRIAL 2005 DIGITAL CDI	MT280534007 (280,300)		MT280534007 (280,300)		1
35	SOPORTE CDI /CDI SUPPORT		ET551002809	-	-	1
36	ALLEN 6X14 / 6X14 ALLEN			T0306014	T0306014	1
37	CONMUTADOR LUZ TT-97 / LIGHT SWITCH	ET602002808	ET602012808	ET602012808	ET602012808	1
38	INTERMITENTE DERECHO DELANTERO / FRONT RIGHT INDICATOR		-	BT280634018	-	1
39	TORNILLO PHILIPS ROSCA-CHAPA 6.3x16 NEGRO / 6.3X16 CLACK SCREW		T0706316	-	T0706316	2
40	SOPORTE INTERMITENTE DELANTERO / FRONT INDICATOR SUPPORT		BE250134017	-	BE250134017	2

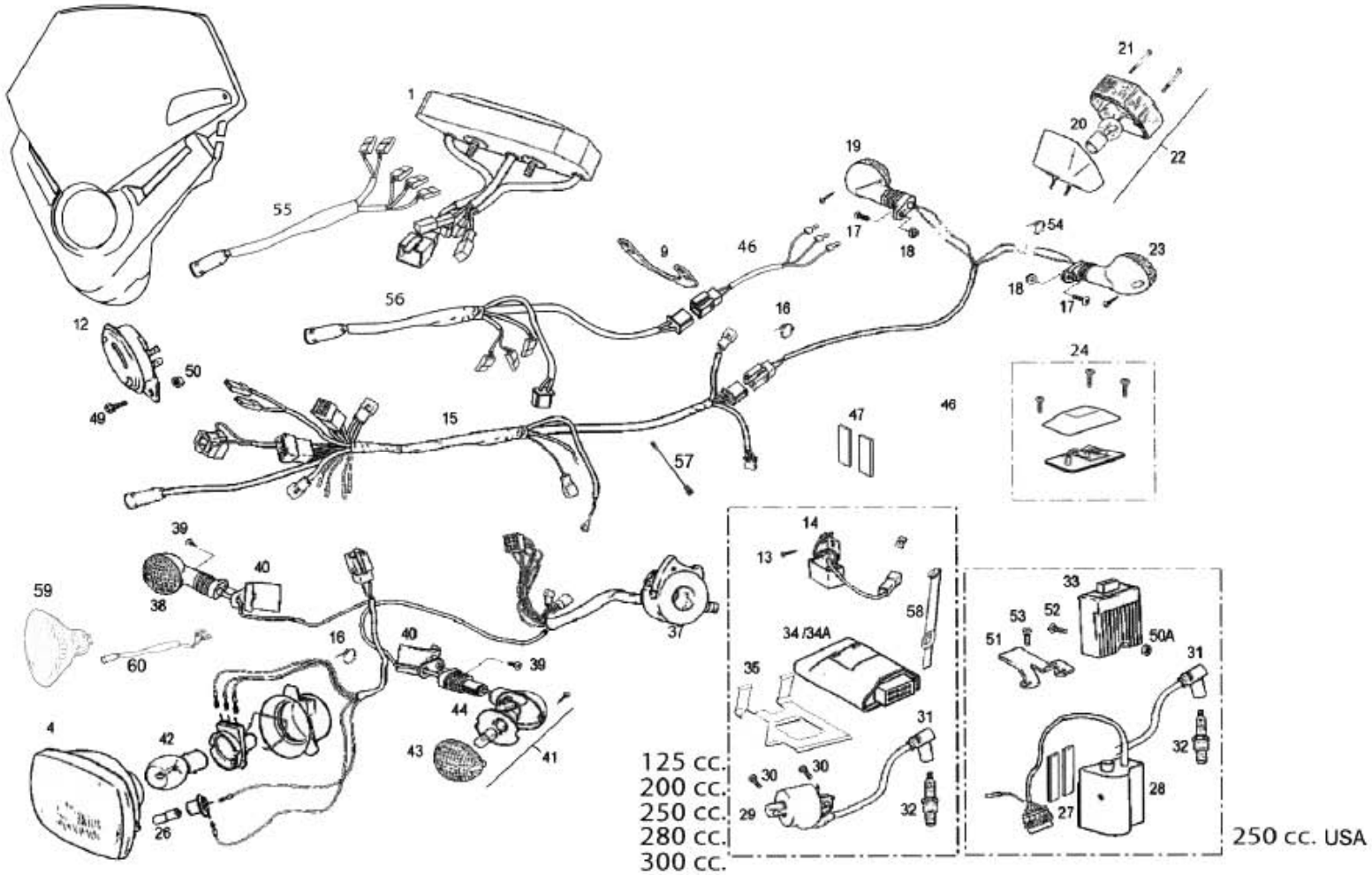
125 cc.
200 cc.
250 cc.
280 cc.
300 cc.
250 cc. USA

Nº	DESCRIPCION / DESCRIPTION	USA	125 RACING	125 / 200 / 280 / 300	250	Cant.
41	INTERMITENTE IZQUIERDO DELANTERO / FRONT LEFT INDICATOR		-	BT280634019	-	1
42	BOMBILLA 12V 35W/35 (1221) / 12V 35W/35 LAMP		L300122	-	L300122	4
43	CRISTAL INTERMITENTE / INDICATOR COVER		BE250134120	-	BE250134120	4
44	LÁMPARA 12V15W CASQUETE / 12V15W LAMP		L300115	-	L300115	4
45	ÓPTICA FARO HOMOLOGADO / HEADLIGHT		BT280120022	BT280120022	BT280120022	1
46	INST. ALARGO PILOTO TRASERO TRIAL PRO HOMOL. / INSTALLATION	ET300102808	BT280434016	BT280434016	BT280434016	1
47	ESPUMA PROTECTORA CDI KOKUSAN TRIAL PRO 2005 / CDI PROTECTOR	MT280534023	MT280534023	MT280534023	-	2
48	TUERCA 956 RÁPIDA M6 0212827-99 / NUT	T2606000	T2606000	T2606000	-	1
49	ULS 6X10 C/ARANDELA PLATA / ULS 6X10 BOLT	T0556010	T0556010	-	T0556010	1
50	TUERCA AUTOBLOCANTE BAJA M6 (DIN985) / M6 NUT	T2106001	T2106001	-	T2106001	1
50A	TUERCA AUTOBLOCANTE BAJA M6 (DIN985) / M6 NUT			-	T2106001	1
51	SOPORTE CDI DUCATI / CDI SUPPORT			-	BT300434107	1
52	ULS 6X16 / ULS 6X16 BOLT	T0506016	T0506016	-	T0506016	1
53	ALLEN 6X14 / NUT M6	T0306014	T0306014	-	T0306014	1
54	BRIDA NYLON 3.6X140 LAT.EMBRAGUE / ALLEN BOLT 6X14		BE250022031	-	BE250022031	1
55	CONECTOR LUZ RACING / RACING FRONTLIGHT	ET203002808				1
56	INSTALACIÓN RACING TRIAL / TRIAL RACING INSTALLATION	ET10000RC2808				1
57	ALARGO CONECTOR BOBNA / BOBINE WIRE EXTENSION	ET501002809	-	-	-	1
58	GOMA SUJECCION CDI /	BE250034100	-	-	-	1
59	OPTICA 20 LEDS FARO RACING / OPTICS 20 LEDS LIGHTHOUSE RACING	ET20000RC2808				1
60	CABLE ADAPTADOR OPTICA FARO RACING / ADAPTER CABLE LIGHTHOUSE RACING OPTICS	ET203002808				1

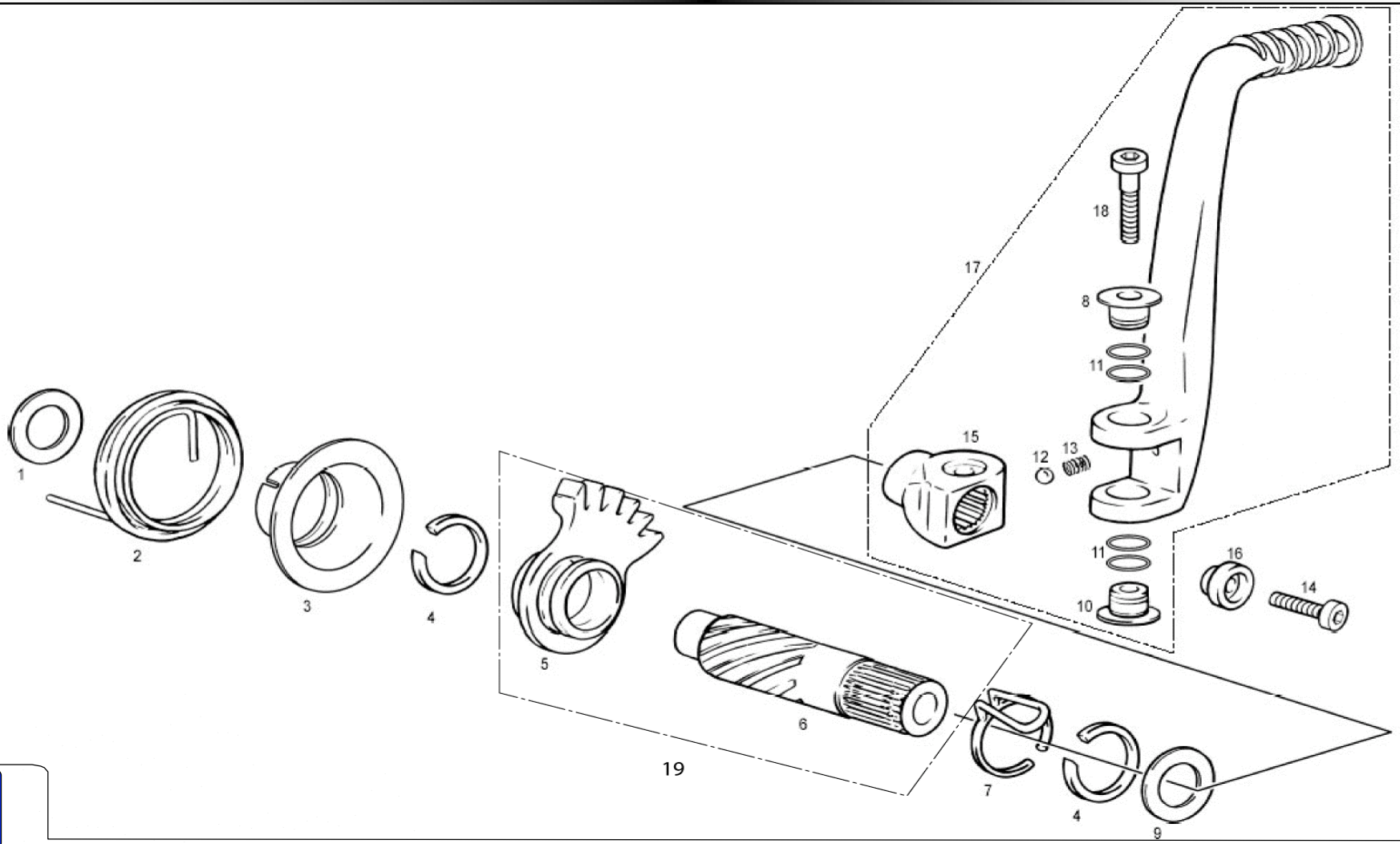
1
2
3
4
5
6
7
4
9
10
11
11
12
13
14
15
16
17
18
19

Nº	DESCRIPCION / DESCRIPTION	PRO2007	Cant.
1	ARANDELA 14X25X0,5 / 14X25X0,5 WASHER	T4001425	1
2	MUELLE ARRANQUE TRIAL / PEDAL KICKSTART SPRING	MT280226007	1
3	CENTRADOR MUELLE ARRANQUE / KICKSTART SPRING BUSHING	MT280226053	1
4	CIRCLIP EJE 18 MM / AXIS CIRCLIP	MT280226017	2
5	PIÑÓN ARRANQUE TRIAL 2002 / KICKSTART GEAR	MT280226002	1
6	EJE ARRANQUE TRIAL 2002 / KICKSTARTER SHAFT	MT280226003	1
7	MUELLE FRICCIÓN ARRANQUE / FRICTION KICKSTART SPRING	MT280226006	1
8	CASQUILLO PEDAL ARRANQUE / KICKSTART PEDAL BUSHING	MT280226066	1
9	ARANDELA 18,2X24X0,5 / 18,2X24X0,5 WASHER	T4001824	1
10	TUERCA PEDAL ARRANQUE / KICKSTART PEDAL NUT	MT280226065	1
11	TÓRICA NBR 12X1 / NBR O'RING	MT280226063	4
12	BOLA MUÑEQUILLA PEDAL / KICKSTART PEDAL BALL	ME250036062	1
13	MUELLE MUÑEQUILLA PEDAL / KICKSTART PEDAL SPRING	ME250036066	1
14	TORNILLO UFK M6X25 / M6X25 UFK SCREW	T0316025	1
15	MUÑEQUILLA PEDAL ARRANQUE / KICKSTART PEDAL BASE	MT280226061	1
16	CASQUILLO SUJECIÓN PEDAL / KICKSTART PEDAL BUSHING	MT280226068	1
17	CTO. PEDAL ARRANQUE TRIAL 2004 / KICKSTART PEDAL COMPLETE	MT280626060	1
18	ALLEN M6X35 / M6X35 ALLEN BOLT	T0306035	1
19	CTO.EJE Y PIÑÓN ARRANQUE / SHAFT AND STARTING PINION	MT280226002R	1

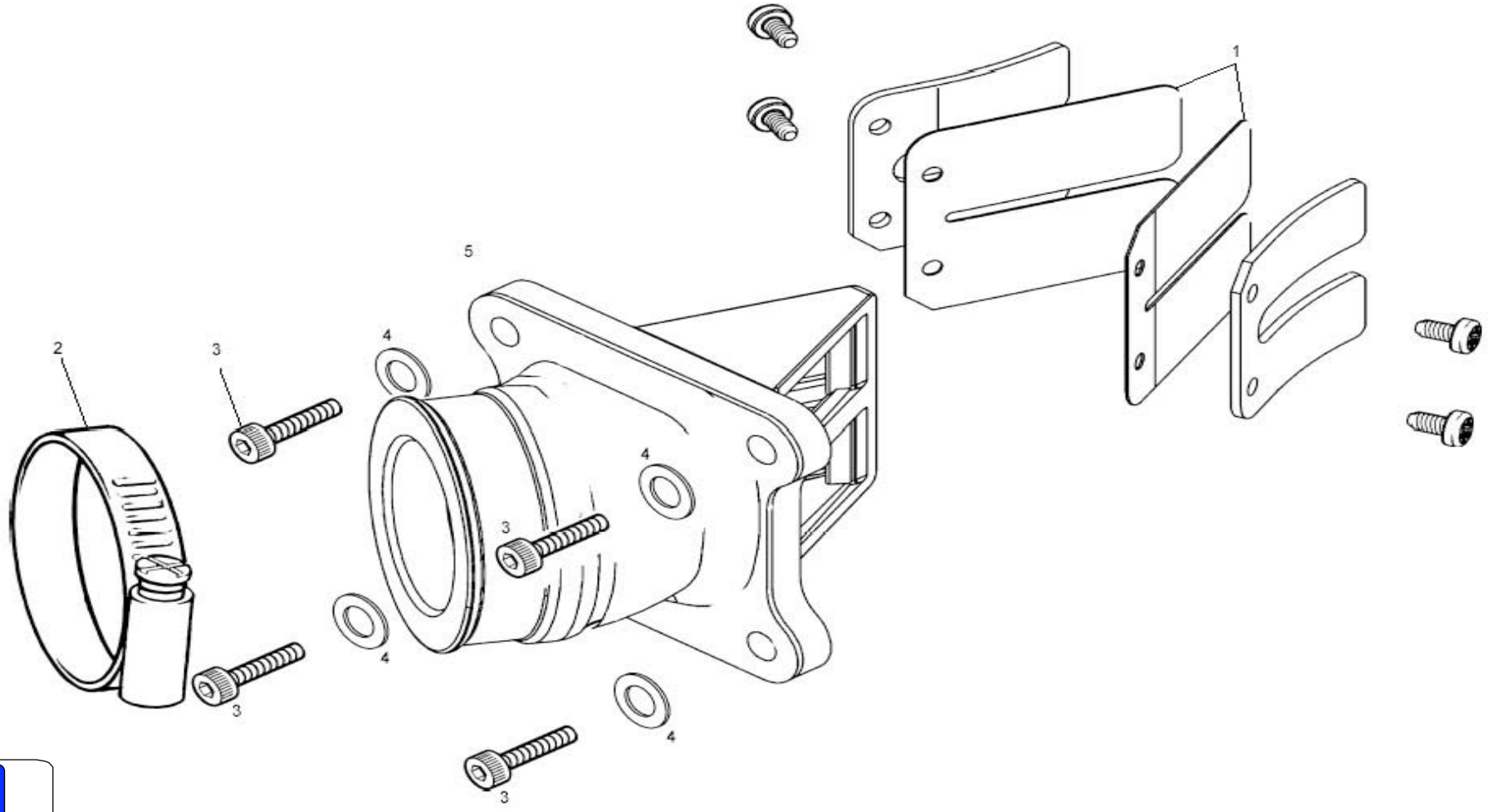
1
2
3
4
5

Nº	DESCRIPCION / DESCRIPTION		PRO2007	Cant.
1	JUEGO LÁMINAS ADMISIÓN / REEDS SET		MT280416041	1
1	LAMINA ADMISION KEIHIN / LAMINA ADMISSION KEIHIN		M01616000	1
2	ABRAZADERA S/44/9 W1 / CLAMP		BT28032838	1
3	ALLEN 5X15 DACROMET / 5X15 DACROMET ALLEN BOLT		T0305015	4
4	ARANDELA 5X12X1,5 / 5X12X1,5 WASHER		T4005012	4
5	CAJA LÁMINAS TRIAL 2004 / REED BLOCK ASSY		MT250002808	1
6	ADAPTADOR TUBERA / RUBBER ADAPTATOR	*	MT300616133	
7	TUBERA ADM.TRIAL ALUMINIO / ALUMINIUM ADM.TRIAL RUBBER	*	MT300616131	
8	JUNTA CAJA LÁMINAS-TUBERA / REED VALVE GASKET - RUBBER	*	MT300644105	
9	CAJA LÁMINAS 250-270-280-320 / 250-270-280-320 REED VALVE	*	M01617200	
10	JUNTA TUBERA / RUBBER GASKET	*	M04416003	

* pertenecen a carburador keihin

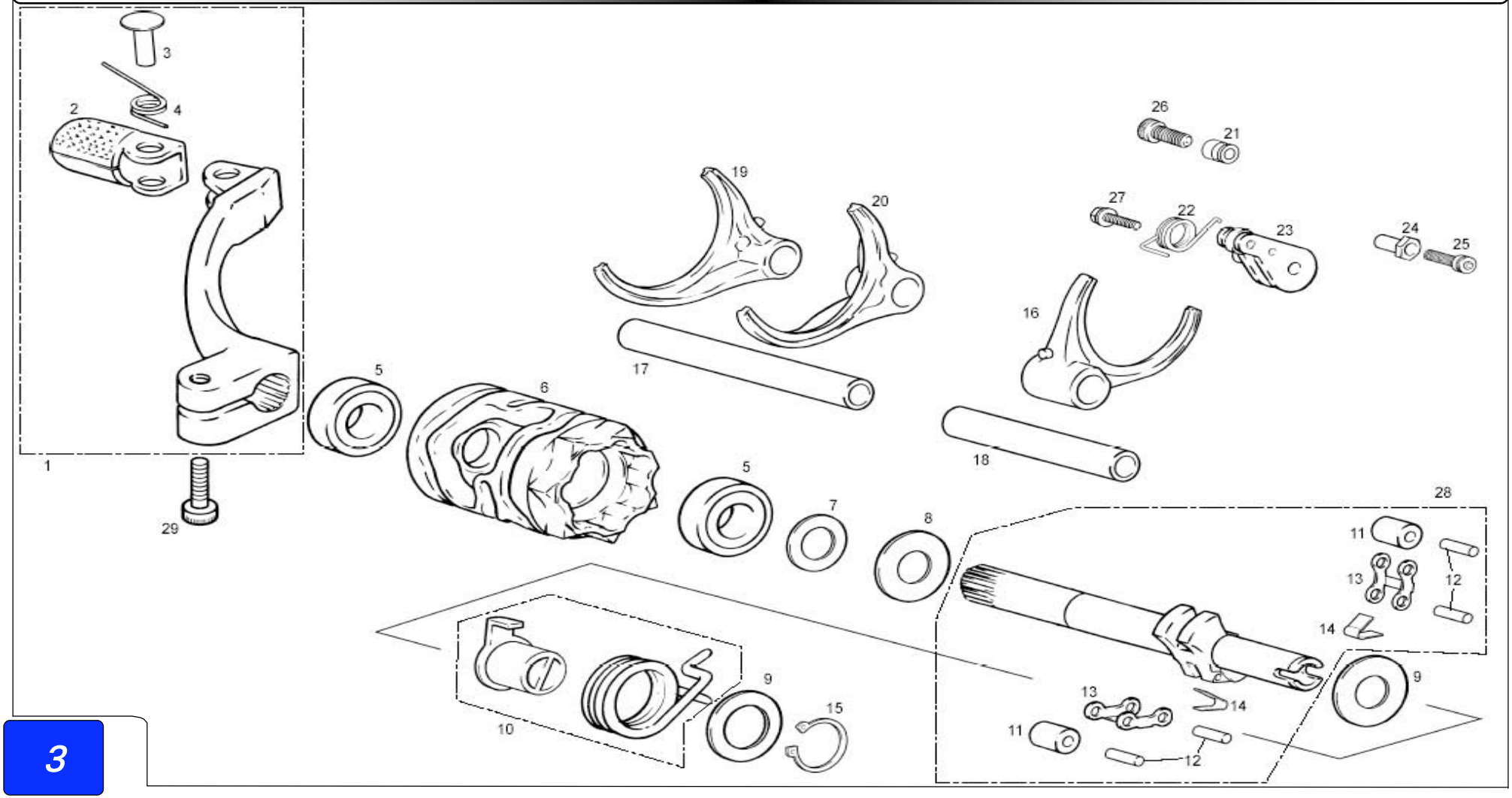
1
2
3
4
5
6
7
8
9
10
11
12
13
14
15
16
17
18
19
20
21
22
23
24
25
26
27
28
29

Nº	DESCRIPCION / DESCRIPTION	PRO2007	Cant.
1	CTO. PEDAL CAMBIO / GEAR PEDAL COMPLETE	MT280238026	1
2	PUNTERA PEDAL CAMBIO / GEAR PEDAL END	ME25636027	1
3	REMACHE PUNTERA CAMBIO / RIVOT PEDAL END	ME25636030	1
4	MUELLE PUNTERA PEDAL CAMBIO / PEDAL END SPRING	M121000	1
5	COJINETE 12X24X6 2Z DESMO / 12X24X6 2Z DESMO BEARING	MT280238032	2
6	DESMODRÓMICO / SHIFT DRUM	MT280238031	1
7	ARANDELA 12,2X18X0,5 / 12,2X18X0,5 WASHER	T4001218	1
8	ARANDELA 12,2X24X0,5 / 12,2X24X0,5 WASHER	T4001224	1
9	ARANDELA 10,2X24X0,5 / 10,2X24X0,5 WASHER	T4011024	2
10	POSICIONADOR Y MUELLE EJE SELECTOR / SHIFT SHAFT CENTER LOCATOR AND SPRING	MT280238037CT	1
11	RODILLO TRINQUETE SELECTOR / RATCHET ROLLER	MT280238040	2
12	AGUJA 3X13,8 / 3X13,8 NEEDLE	MT280238048	4
13	TRINQUETE SELECTOR / RATCHET ARM SELECTOR	MT280238036	2
14	MUELLE TRINQUETE SELECTOR / RATCHET SEL. SPRING	MT280238039	2
15	CIRCLIP E10 EJE / E10 SHAFT CIRCLIP	M03314011	1
16	HORQUILLA PRIMARIA / SHIFT FORK PRIMARY	MT280238009	1
17	EJE HORQUILLA LARGO / LONG FORK SHAFT	MT280238044	1
18	EJE HORQUILLA CORTO / SHORT FORK SHAFT	MT280238045	1
19	HORQUILLA 2-4-5-6 / 2-4-5-6 FORK	MT280238007	1
20	HORQUILLA 1-3 / 1-3 FORK	MT280238008	1
21	TOPE MUELLE FIJADOR / SPRING REST POST	MT280238049	1
22	MUELLE FIJADOR MARCHAS / GEAR SELECTOR SPRING	MT280238034	1
23	FIJADOR MARCHAS / GEAR SELECTOR ARM AND ROLLER	MT280238033	1
24	TOPE MUELLE EJE SELECTOR / SELECTOR SPRING TOP SHAFT	MT280238050	1
25	ALLEN 5X25 DACROMET / 5X25 DACROMET ALLEN BOLT	T0305025	1
26	ALLEN 5X20 / 5X20 ALLEN	T0305020	1
27	HEXAGONAL 5X25 CON ARANDELA / HEXAGONAL BOLT WITH WASHER	BT280010086	1
28	CONJUNTO EJE SELCTOR / SHIFT SHAFT SET	MT280238043	1
29	ALLEN 5X15 / 5X15 ALLEN	T0305015	1

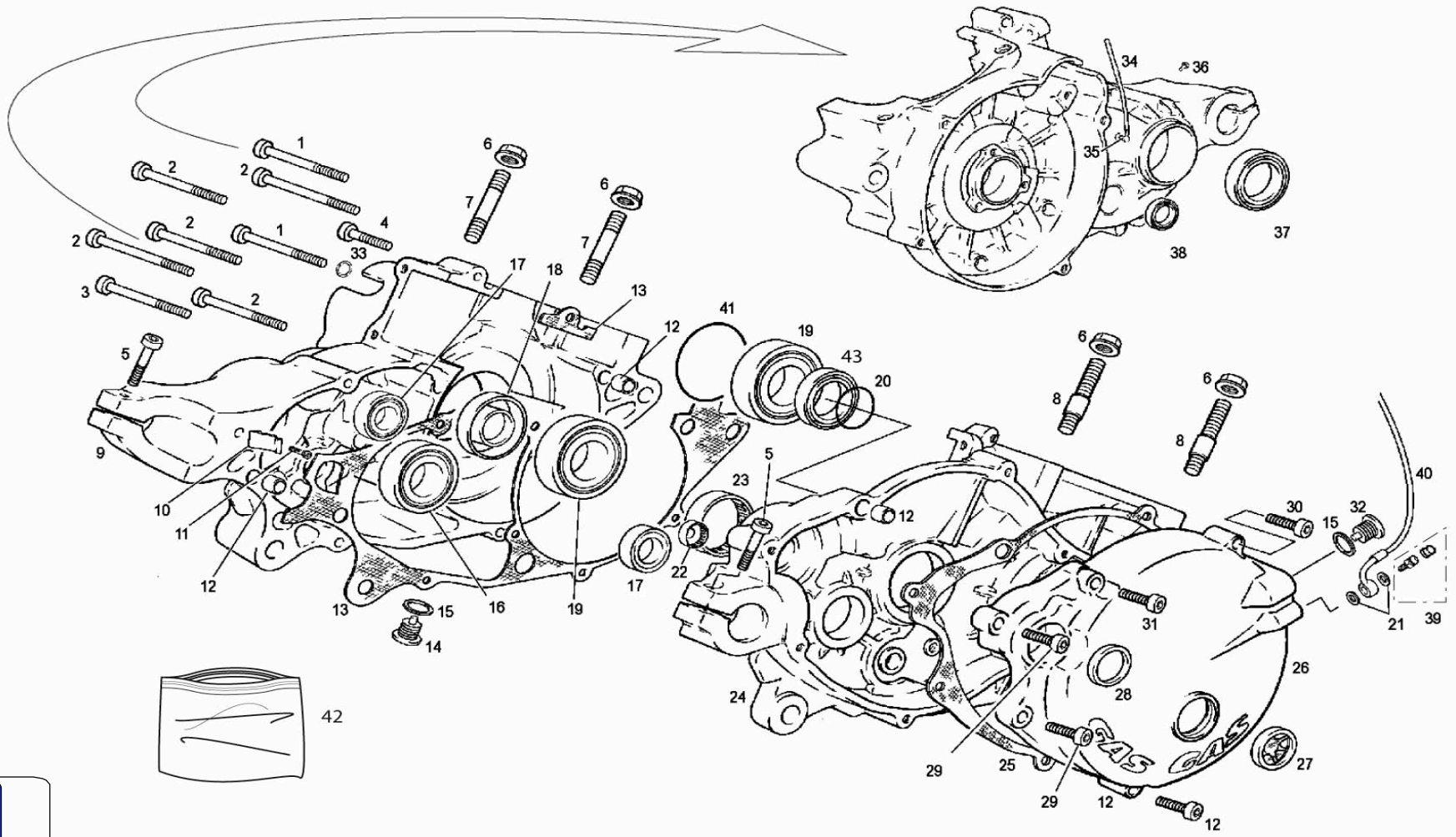
1
2
2
2
2
1
4
33
3
2
5
9
10
11
12
13
15
14
16
17
18
19
6
7
6
7
13
12
41
19
43
20
17
22
23
5
12
24
42
6
8
6
8
30
15
32
40
31
21
39
26
28
29
25
29
12
12
27
34
36
35
38
37

Nº	DESCRIPCION / DESCRIPTION	PRO2007	Cant.
1	ALLEN 5X65 ZINCADO NEGRO / 5X65 BLACK ALLEN BOLT	T0315065	2
2	ALLEN 5X55 ZINCADO NEGRO / 5X55 BLACK ALLEN BOLT	T0305055	5
3	ALLEN 5X75 ZINCADO NEGRO / 5X75 BLACK ALLEN BOLT	T0315075	1
4	ALLEN 5X35 DACROMET / 5X35 DACROMET ALLEN BOLT	T0305035	1
5	ALLEN 5X20 DACROMET / 5X20 DACROMET ALLEN BOLT	T0305020	2
6	TUERCA CILINDRO 8.8 ESP / CILINDER NUT	M01613001	4
7	ESPÁRRAGO CILINDRO / BASE STUD CYLINDER LEFT	MT280216023	2
8	ESPÁRRAGO CON CENTRAJE / BASE STUD CYLINDER RIGHT	MT280216056	2
9	CÁRTER MG. IZQUIERDO TRIAL 2003 / LEFT CRANKCASE HALF	MT280710001	1
10	TOPE ARRANQUE TRIAL / STOP KICKSTART PEDAL	MT280226011	1
11	ALLEN 5X15 DACROMET / 5X15 DACROMET ALLEN BOLT	T0305015	1
12	CASQUILLO CENTRADOR CÁRTER 6X9X14 / CRANKCASE BUSHING	M01017000	4
13	JUNTA CÁRTER CENTRAL 0.2 MM / CENTER CRANKCASE GASKET	MT280344001	1
14	TAPÓN VACIADO ACEITE CON IMÁN / MAGNETIC OIL DRAIN PLUG	ME25610017	1
15	ARANDELA TIPO BUJÍA 12X18X2 / WASHER	MT280410030	2
16	COJINETE 25X47X12 / 25X47X12 / BEARING	MT280236159	1
17	COJINETE 15X32X9 6002 2RSL CAMBIO / BEARING GEAR	MT280236160	2
18	RETÉN 25X35X7 TEFLÓN CIGUEÑAL IZQUIERDO / OIL SEAL CRANK SHAFT	MT280212009	1
19	COJINETE CIGUEÑAL ST5225 / ST5225 CRANKSHAFT BEARING	MT280412006	2
20	TÓRICA 25X1.5 NBR / O'RING	MT280212025	2
21	ARANDELA AM 10X14X1.5 / WASHER	BT280422007	2
22	COJINETE BK1412 ARRANQUE TRIAL / KICKSTART BEARING	MT280226067	1
23	COJINETE 35X45X12 NQ (EJE PRIMARIO) / 35X45X12 BEARING	MT280236158	1
24	CÁRTER MG DERECHO TRIAL 2003 / RIGHT CRANKCASE	MT280710000	1
25	JUNTA TAPA EMBRAGUE / CLUTCH COVER GASKET	MT280244002	1
26	TAPA EMBRAGUE MG TRIAL / CLUTCH COVER	MT280732001	1
27	VISOR NIVEL ACEITE EC400-4T / OIL LEVEL SIGHT GLASS	MFS400110015	1
28	RETÉN 18-24-4 TRIAL 2002 / 18-24-4 4 KICKSTART SHAFT SEAL	MT280226016	1
29	ALLEN 5X25 DACROMET / 5X25 DACROMET ALLEN BOLT	T0305025	2
30	ALLEN 5X30 DACROMET / 5X30 DACROMET ALLEN BOLT	T0305030	2
31	ALLEN 5X40 DACROMET / 5X40 DACROMET ALLEN BOLT	T0305040	1
32	TAPÓN LLENADO ACEITE / OIL FILL PLUG	M01016002	1
33	ARANDELA 5X9X1,5 COBRE / 5X9X1,5 WASHER	T4000509	1

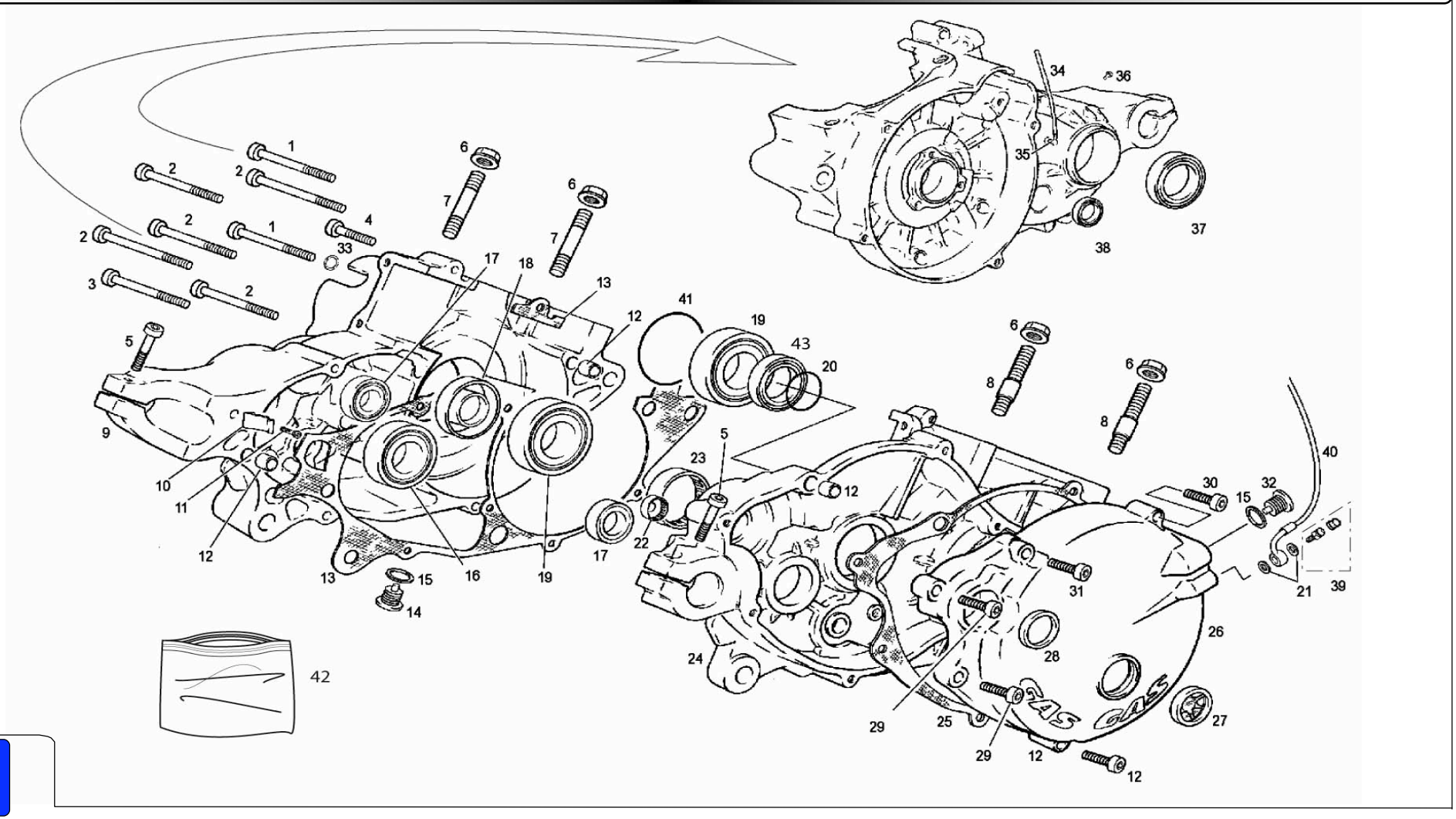
1
2
2
2
1
4
33
3
2
5
9
10
11
12
13
15
14
6
7
17
18
16
19
13
12
41
19
43
20
17
22
23
5
24
6
8
6
8
12
30
15
32
40
31
21
39
26
28
29
25
29
12
12
27
42

Nº	DESCRIPCION / DESCRIPTION	PRO2007	Cant.
34	TUBO DESVAPORIZADOR / DESVAP. HOSE	MT280210012	1
35	DESVAPORIZADOR / DESVAP.	MIT50010012	1
36	TAPÓN PASO ACEITE CÁRTER / OIL CARTER PLUG	MT280210021	1
37	RETÉN 30X40X7 / 30X40X7 SEAL	ME25636024	1
38	RETÉN EJE SELECTOR / AXLE SEAL	MT280236048	1
39	RACORD PINZA EMBRAGUE HIDRÁULICO / HIDRAULIC CLUTCH RACORD	M01060000	1
40	LATIGUILLO EMBRAGUE / CLUTCH HOSE	BT280522003	1
41	TÓRICA COJINETE CIGU. 49X1.5 NBR / O'RING 49X1.5 NBR	MT280512028	2
42	KIT JUNTAS TXT PRO / TXT PRO GASKET SET	MT280244100	1
43	RETEN CIGÜEÑAL / CRANK SHAFT SEAL	MT280412006/1	1

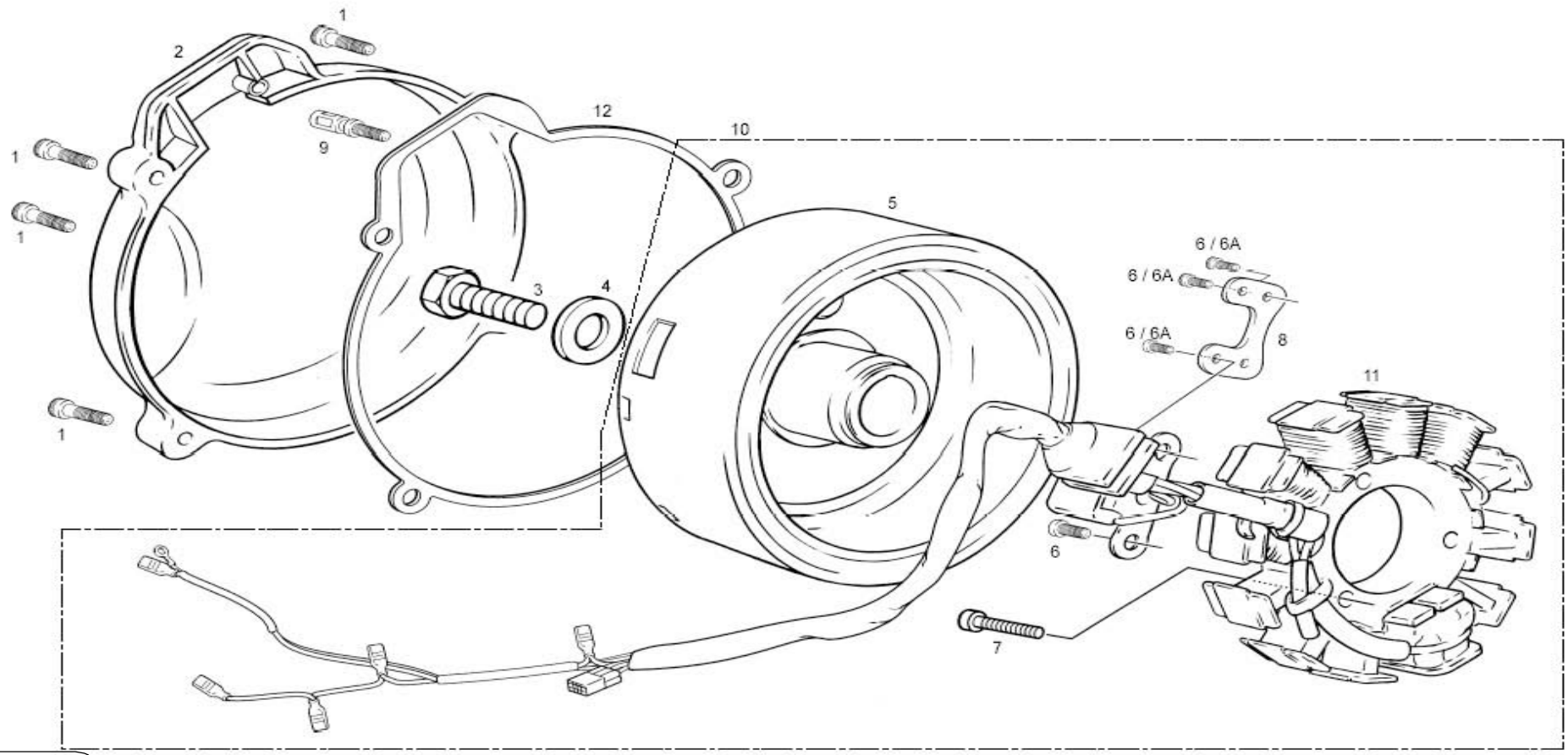
1
2
1
1
1
9
12
10
5
3
4
6 / 6A
6 / 6A
6 / 6A
8
11
6
7

Nº	DESCRIPCION / DESCRIPTION	USA	125 / 200	250	280 / 300	Cant.
1	ALLEN 5X20 / 5X20 ALLEN BOLT	T0305020N	T0305020N	T0305020N	T0305020N	5
2	TAPA ENCENDIDO TRIAL SXXI / COVER FLY-WHEEL	MT280710004	MT280710004	MT280710004	MT280710004	1
3	TORNILLO M10X25 / M10X25 SCREW	T0101025/2	T0101025/2	T0101025/2	T0101025/2	1
4	ARANDELA GRUESA 10X23X4 / 10X23X4 WASHER	T4001024	T4001024	T4001024	T4001024	1
5	VOLANTE MAGNETICO DIGITAL / DIGITAL IGNITION FLY-WHEEL			MT30034005		1
6	ALLEN UFK 5X10 / UFK 5X10 ALLEN BOLT		T0315010			3
6A	ALLEN UFK 5X10 / UFK 5X10 ALLEN BOLT			T0315010	T0315010	1
7	ALLEN UFK NEGRO 5X25 / UFK 5X25 BLACK ALLEN BOLT		T0315025N	T0315025N	T0315025N	3
8	ADAPTADOR PICK / PICK ADAPTATOR		MT120234017			1
9	TORNILLO PICK UP TRIAL 2003 / PICK UP TRIAL 2003 SCREW		MT280334018	MT280334018	MT280334018	1
10	CTO. ENCENDIDO PRO 2005 / IGNITION SET		MT120534005		MT280534005	1
11	STATOR 431 73 0702 / STATOR			MT250734008		1
12	JUNTA TAPA VOLANTE ENCENDIDO / COVER FLY WHEEL GASKET		MT280344004	MT280344004	MT280344004	1

125 cc / 200 cc

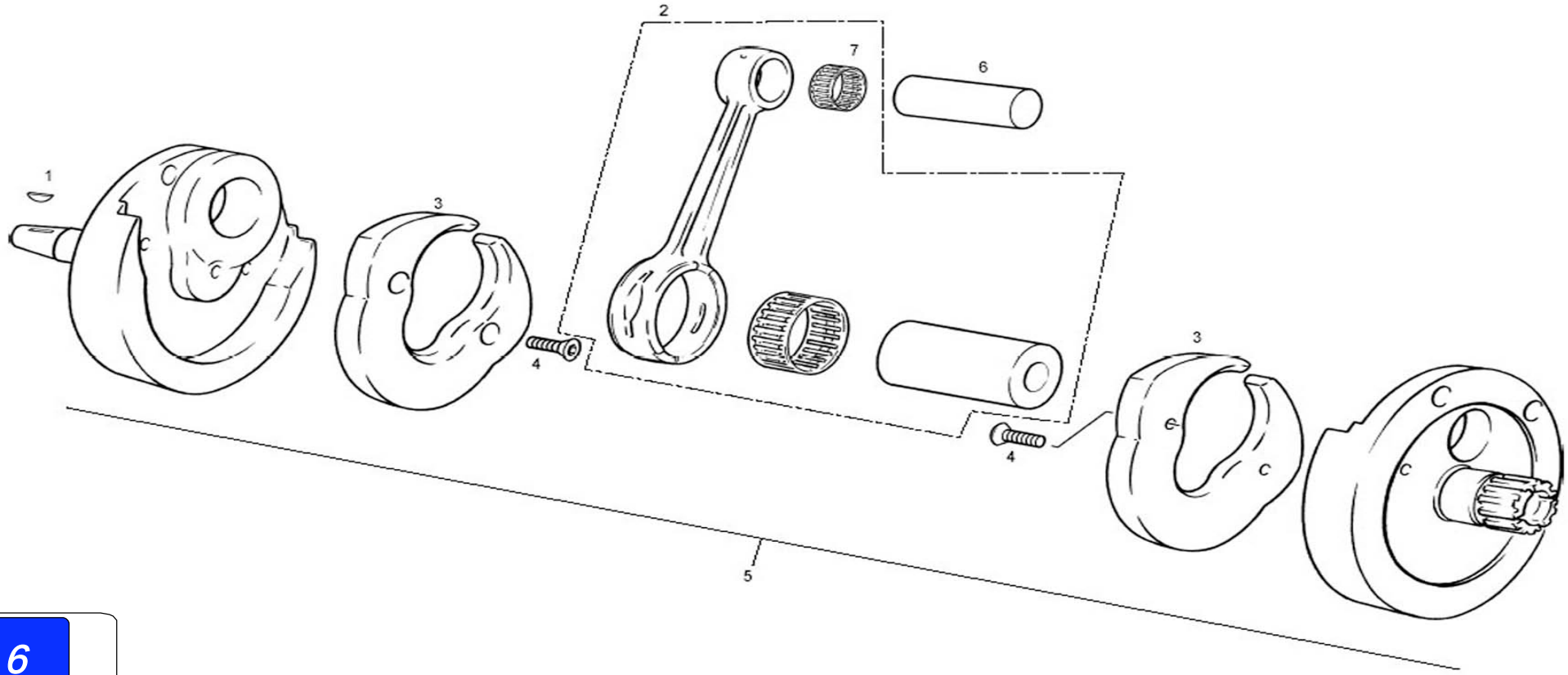

Nº	DESCRIPCION / DESCRIPTION	125	200	Cant.
1	CHAVETA D10X3X3.7 TRIAL 2002 / D10X3X3.7 KEY	MT280234016	-	1
2	CONJUNTO BIELA / CONNECTING ROD KIT, REPAIR	MT120212100	-	1
3	NYLON CONTRAPESO / CONTERWEIGHT NYLON	MT120212021	-	2
4	ALLEN CÓNICO UN15933 M6X16 / M6X16 ALLEN BOLT	T0406016	-	4
5	CTO. CIGÜEÑAL TRIAL SXXI / CRANK SHAFT ASSEMBLY COMPLETE	MT120212000	-	1
6	BULÓN PISTÓN TRIAL / PIN TRIAL PISTON	MT120216125	MT20716125	1
7	COJINETE AGUJAS PIE BIELA / NEEDLES BEARING	M01411001	M01411100	1

250 cc / 280 cc / 300 cc

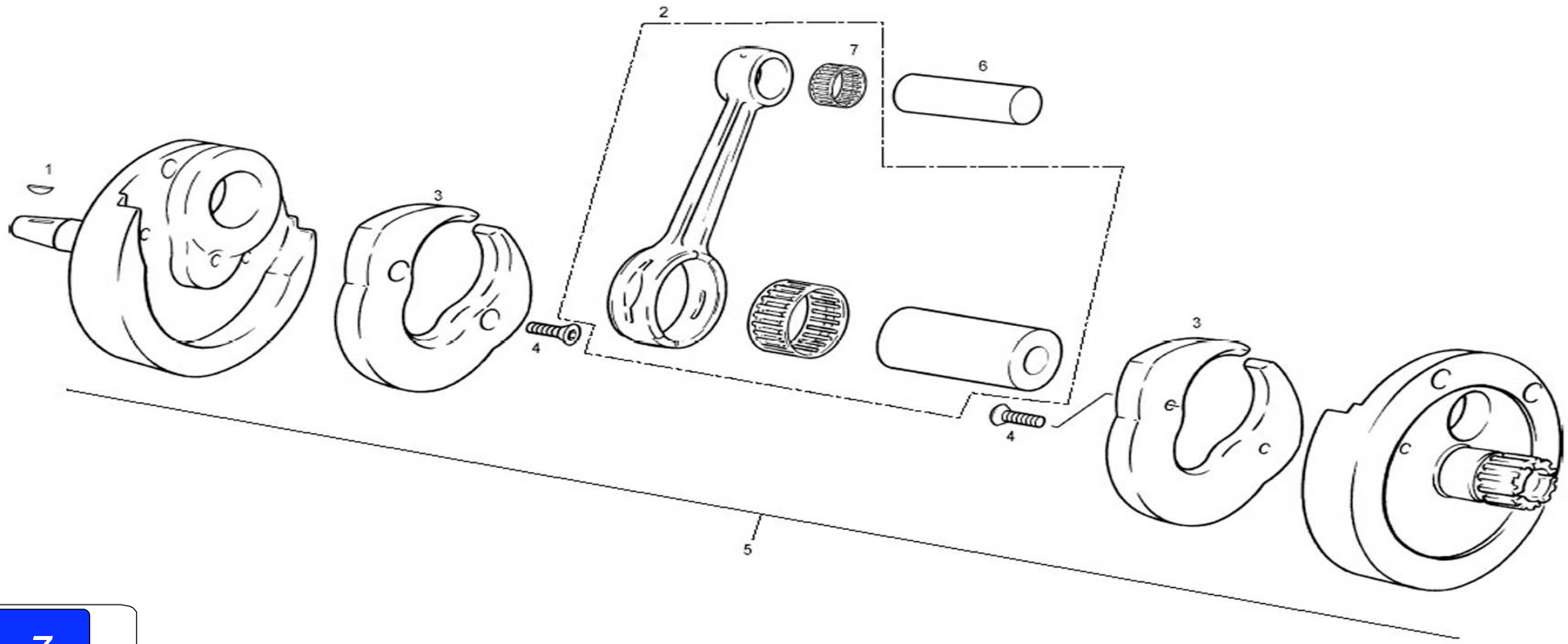

Nº	DESCRIPCION / DESCRIPTION	250 / 280 / 300	Cant.
1	CHAVETA D10X3X3.7 TRIAL 2002 / D10X3X3.7 KEY	MT280234016	1
2	CONJUNTO BIELA / CONNECTING ROD KIT, REPAIR	MT280212100	1
3	NYLON CONTRAPESO / CONTERWEIGHT NYLON	MT280212021	2
4	ALLEN CÓNICO UN15933 M6X16 / ALLEN BOLT	T0406016	4
5	CTO. CIGÜEÑAL TRIAL SXXI / CRANK SHAFT ASSEMBLY COMPLETE	MT280212000	1
6	BULÓN PISTÓN TRIAL / PIN TRIAL PISTON	MT280216125	1
7	COJINETE PIE DE BIELA / NEEDLES BEARING	ME25616035	1

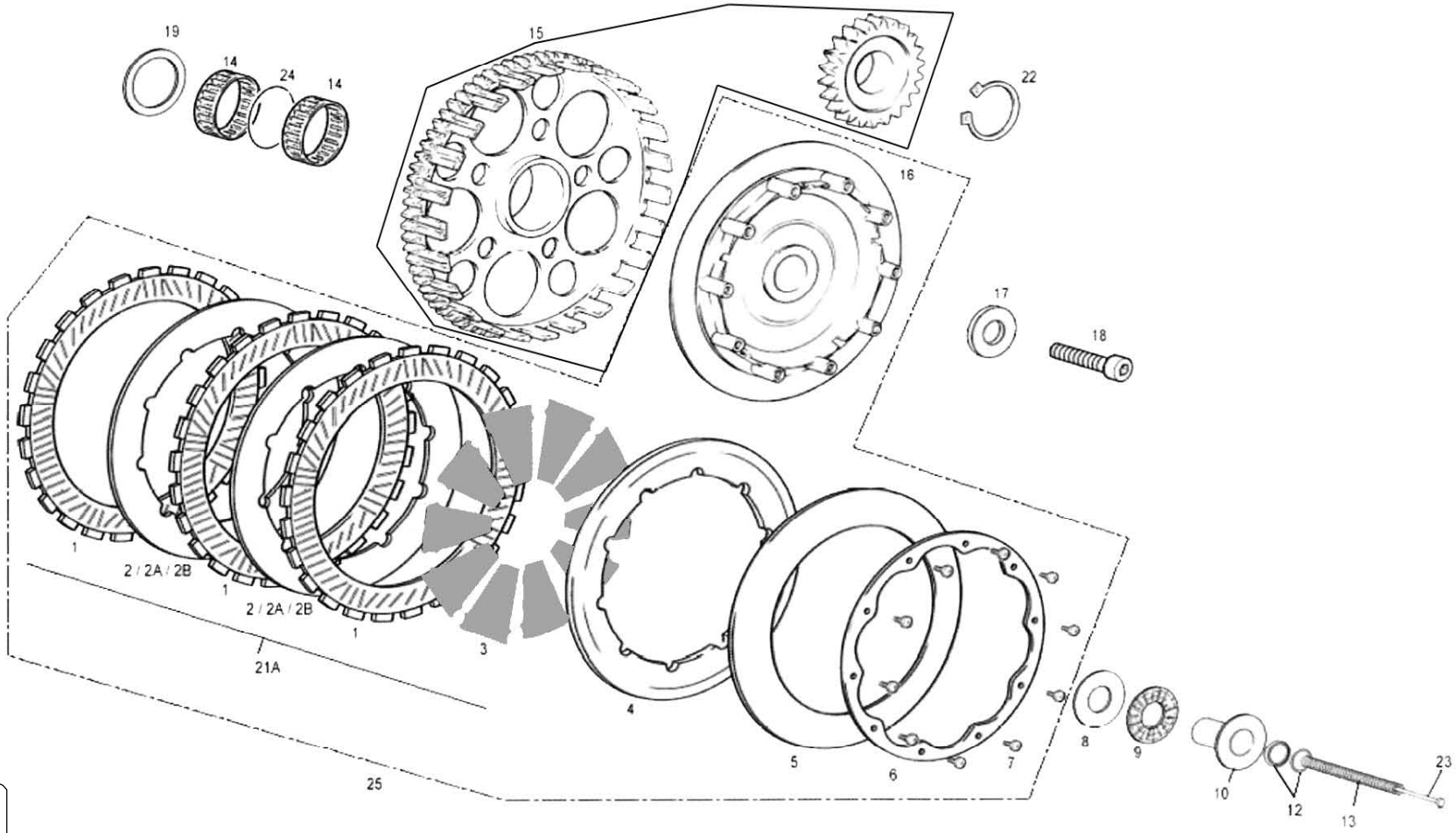
19
14
24
14
15
22
16
17
18
1
2 / 2A / 2B
1
2 / 2A / 2B
1
3
21A
4
5
6
7
8
9
10
12
13
23
25

Nº	DESCRIPCION / DESCRIPTION	125 / 200	250/ 280	Cant.
1	DISCO EMBRAGUE FORRADO TRIAL SXXI / CLUTCH DISC FIBER	-	MT280232051	3
2	DISCO ACERO EMBRAGUE TRIAL 1.5 / CLUTCH DISC STEEL 1.5	-	MT280232050	2
2A	DISCO ACERO EMBRAGUE TRIAL 1.3 / CLUTCH DISC STEEL 1.3	-	MT280232050/3	1
2B	DISCO ACERO EMBRAGUE TRIAL 1.4 / CLUTCH DISC STEEL 1.4	-	MT280232050/4	1
3	DESMULTIPLICADOR EMBRAGUE TRIAL / CLUTCH RELEASE ARM	-	MT280632070	10
4	PRENSA EMBRAGUE TRIAL SXXI / PRESSURE PLATE	-	MT280632006	1
5	MUELLE EMBRAGUE TRIAL / CLUTCH SPRING	-	MT280632015	1
6	SOPORTE MUELLE EMBRAGUE / CLUTCH SPRING SUPPORT PLATE	MT120632045	MT280632045	1
7	ULS ESPECIAL PRENSA 4X10 / PRESSURE PLATE ULS BOLT	-	MT280332077	10
8	BOLET EMBRAGUE TRIAL 2003 / BEARING PLATE	-	MT280332014	1
9	COJINETE PRENSA EMBRAGUE AXK 17X30X2 / BEARING, CLUTCH END PLATE	-	MT280232043	1
10	PISTÓN BOMBIN EMBRAGUE TRIAL 2003 / CLUTCH PUMP PISTON	-	MT280332040	1
12	TÓRICA FKM / FKM O'RING	-	MT280432047	2
13	MUELLE PISTÓN EMBRAGUE TRIAL SXXI / CLUTCH PISTON SPRING	-	MT280332018	1
14	COJINETE G95 CORONA EMBRAGUE / CLUTCH BEARING	-	MT280432039	2
15	CTO. CORONA EMBRAGUE Y PIÑON TRIAL SXXI / OVERALL CROWN CLUTCH AND GEAR	-	MT280232003-MT280212004	1
16	CUBO EMBRAGUE SXXI / CLUTCH HUB	-	MT280632005CT	1
17	CASQUILLO SUJECIÓN EMBRAGUE / CLUTCH HUB BUSHING	-	MT280232080	1
18	ALLEN UFK 5X20 SUJECIÓN CUBO TRIAL 280 / CLUTCH HUB BOLT	-	MT280232081	1
19	ARANDELA 30.2X38X0.5 EMBRAGUE / CLUTCH WASHER	-	T4003038	1
20	PIÑÓN TRANSMISIÓN PRIMARIA / PRIMARY TRANSMISION GEAR	-	MT280212004	1
21	CTO. DISCOS EMBRAGUE TRIAL 2004 / 2004 CLUTCH DISC SET COMPLETE	-	MT280432055	1
22	CIRCLIP E25 CIGÜEÑAL / CRANKSHAFT E25 CIRCLIP	-	MT280212023	1
23	GUÍA MUELLE PISTÓN / PISTON SPRING GUIDE	-	MT280432065	1
24	CIRCLIP CORONA EMBRAGUE / CLUTCH CIRCLIP	-	MT280432139	1
25	CTO. EMBRAGUE TRIAL PRO (HAMBURGUESA) / CLUTCH SET	MT120732069	MT280732069	1

125 cc. / 200 cc.

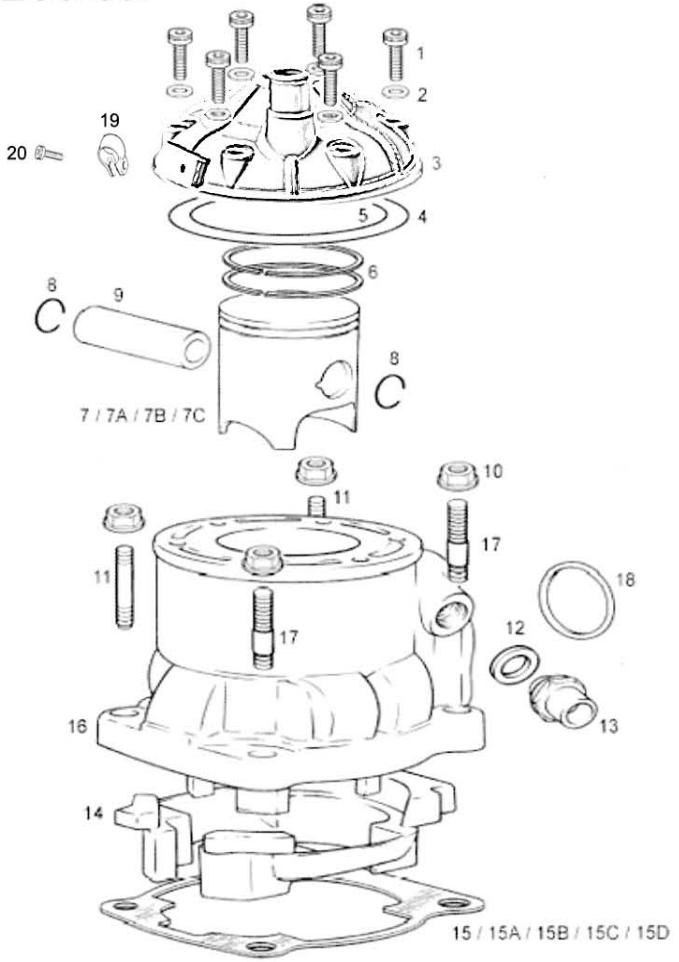

250 cc. / 280 cc. / 300 cc.

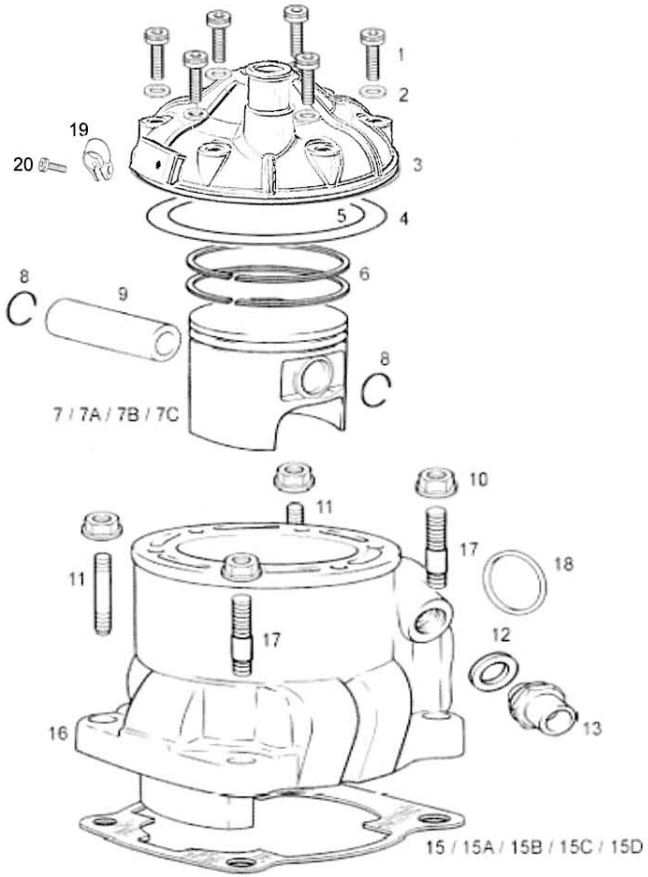

Nº	DESCRIPCION / DESCRIPTION	125	200	250	280	300	Cant.
1	ALLEN 6X25 / 6X25 ALLEN BOLT	-	-	-	T0306025	-	6
2	ARANDELA COBRE 6X10X1.5 / 6X10X1.5 WASHER	-	-	-	T4006008	-	6
3	CULATA TRIAL 2003 / CYL. HEAD	MT750001209	MT750002009	MT750002509	MT750002809	MT750003009	1
4	TÓRICA CULATA EXTERIOR / O'RING CYL. EXTERIOR	ME120116060	-	-	M01619135	-	1
5	TÓRICA CULATA INTERIOR / O'RING CYL. INTERIOR	MT120210040	-	M01619215	M01619215	MT300416065	1
6	AROS PISTÓN / PISTON RING	MT120216040	MT200516040	MT250516040	MT280516040	MT300316040	2
7	PISTÓN TRIAL SXXI / PISTON TRIAL	MT120216020	MT200216020	MT250516020	MT280516020	MT300316020	1
7A	PISTÓN LETRA B / PISTON B	MT120210121	MT200216121	MT250516121	MT280516121	MT300316121	1
7B	PISTÓN LETRA C / PISTON C	MT120210122	MT200216122	MT250216122	MT280216122	MT300316122	1
7C	PISTÓN LETRA D / PISTON D	MT120216123	MT200216123	MT250216123	MT280216123	MT300316123	1
8	CIRCLIP PISTÓN / CLIP PISTON	ME25616126	M01417052	ME25616126	ME25616126	ME25616126	2
9	BULÓN PISTÓN / PIN PISTON	MT120216125	MT20716125	MT280216125	MT280216125	MT280216125	1
10	TUERCA CILINDRO / CYLINDER NUT	-	-	-	M01613001	-	4
11	ESPÁRRAGO CILINDRO / STUD BOLT CYLINDER	-	-	-	MT280216023	-	2
12	ARANDELA PLANA FIBRA / FIBER WASHER	-	-	-	M01612026	-	1
13	RACORD CILINDRO / CYLINDER WATER HOSE NECK	-	-	-	MT280210013	-	1
14	ADAPTADOR CILINDRO / CYLINDER ADAPTER	MT120216087	MT120216087	-	-	-	1
15	JUNTA CILINDRO 0,8 mm. / 0,8 mm. GASKET CYLINDER BASE	-	-	-	MT28024400	-	1
15A	JUNTA CILINDRO 0,3 mm. / 0,3 mm GASKET CYLINDER BASE	-	-	-	MT208224009	-	1
15B	JUNTA CILINDRO 1 mm. / 1 mm. GASKET CYLINDER BASE	-	-	-	MT280244010	-	1
15C	JUNTA CILINDRO 0,5 mm. / 0,5 mm. GASKET CYLINDER BASE	MT120244000	MT120244000	-	-	-	1
15D	JUNTA CILINDRO 0,15 mm. / 0,15 mm. GASKET CYLINDER BASE	-	-	-	MT280244015	-	1
16	CILINDRO TRIAL / CYLINDER	MT120716022	MT120716022	MT250716022	MT280716022	MT300716022	1
17	ESPÁRRAGO CON CENTRAJE / STUD WITH CENTER	-	-	-	MT280216056	-	2
18	JUNTA ESCAPE / EXHAUST GASKET	-	-	-	MT280244012	-	1
19	GRAPA SUJECCION CABLES / WIRE SUPPORT	ET750502809	ET750502809	ET750502809	ET750502809	ET750502809	1
20	ALLEN 4X6 ZINCADO / M4X6 ALLEN	T0304006	T0304006	T0304006	T0304006	T0304006	1
	CTO. CILINDRO Y PISTON / SET CYLINDER AND PISTON	MT120716022CT	MT200716022CT	MT250716022CT	MT280716022CT	MT300716022CT	1

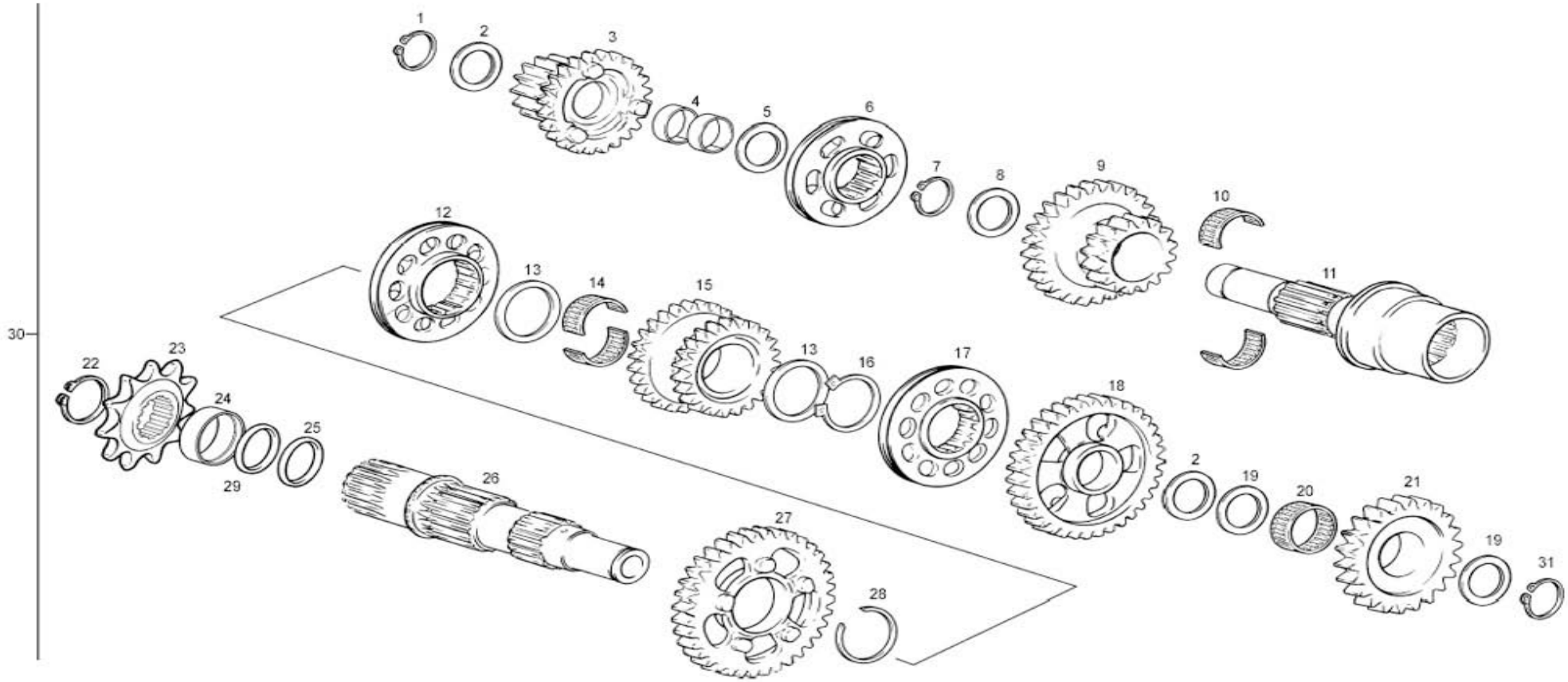
1
2
3
4
5
6
7
8
9
10
11
12
13
14
15
13
16
17
18
2
19
20
21
19
31
22
23
24
25
29
26
27
28
30

Nº	DESCRIPCION / DESCRIPTION	125	200	250 / 280 / 300	Cant.
1	CIRCLIP E15 DIN471 / E15 CIRCLIP	-	-	MT280236163	2
2	ARANDELA 15,2X23X0,5 / 15,2X23X0,5 WASHER	-	-	T4001523	4
3	PIÑÓN 2 / PINION 2	-	-	MT280236071	1
4	DOLLA / BUSHING	-	-	MT280236164	2
5	ARANDELA 17X23X0,5 / 17X23X0,5 WASHER	-	-	T4001723	1
6	DESPLAZABLE PRIMARIO / PRIMARY SELECTOR DISC	-	-	MT280236073	1
7	CIRCLIP E20 DIN 471 REBAJADO / E20 CIRCLIP	-	-	MT280236165	1
8	ARANDELA 20X25X0,5 / 20X25X0,5 WASHER	-	-	T4002025	1
9	PIÑÓN 3 / PINION 3	-	-	MT280236072	1
10	JAULA AGUJAS / NEEDLE BEARING	-	-	MT280236162	2
11	EJE PRIMARIO / PRIMARY SHAFT	-	-	MT280236070	1
12	DESPLAZABLE 2 SECUNDARIO / SECONDARY SELECTOR DISC	-	-	MT280236080	1
13	ARANDELA 22X27X0,5 / 22X27X0,5 WASHER	-	-	T4002227	2
14	JAULA AGUJAS / NEEDLE BEARING	-	-	MT280236161	2
15	PIÑÓN 5 / PINION 5	-	-	MT280236078	1
16	CIRCLIP E22 DIN471 / E22 CIRCLIP	-	-	MT280236166	1
17	DESPLAZABLE 3 SECUNDARIO / SECONDARY SELECTOR DISC	-	-	MT280236079	1
18	PIÑÓN 3 SECUNDARIO / SECONDARY 3 GEAR	-	-	MT280236076	1
19	ARANDELA / WASHER	-	-	M02622001	2
20	JAULA AGUJAS / NEEDLE BEARING	-	-	MT280226015	1
21	PIÑÓN INTERMEDIO ARRANQUE / GEAR, IDLE KICKSTART	-	-	MT280226001	1
22	CIRCLIP E25 / E25 CIRCLIP	-	-	MT280212023	1
23	PIÑÓN CADENA SALIDA / SPROCKET, COUNTERSHAFT	MT120236525	MT200236525	MT280236525	1
24	CASQUILLO RETÉN SALIDA CAMBIO / SHIFT SEAL BUSHING	-	-	MT280236046	1
25	TÓRICA 25X2 NBR / NBR 25X2 O'RING	-	-	ME25632025	1
26	EJE SECUNDARIO / SECONDARY SHAFT	-	-	MT280236075	1
27	PIÑÓN 2 SECUNDARIO / SECONDARY 2 GEAR	-	-	MT280236077	1
28	CIRCLIP SW25 / SW25 CIRCLIP	-	-	MT280236167	1
29	TÓRICA 25X1,5 NBR / 25X1,5 O'RING	-	-	MT280212025	1
30	CTO. CAMBIO TRIAL / TRANSMISSION COMPLETE	-	-	MT280236010	1
31	CLIP DE 15MM PIÑÓN INT. ARRANQUE / 15MM. CIRCLIP	-	-	M02633000	1

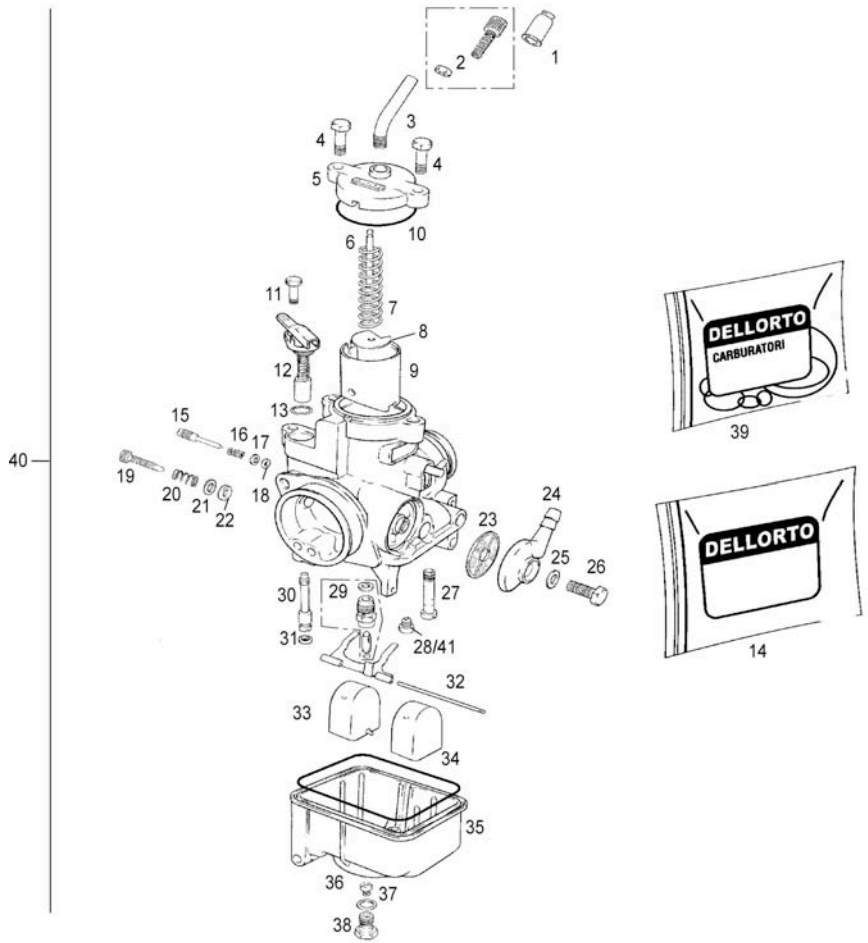
1
2
3
4
4
5
6
7
8
9
10
11
12
13
14
15
16
17
18
19
20
21
22
23
24
25
26
27
28/41
29
30
31
32
33
34
35
36
37
38
39
40
DELLORTO
CARBURATORI
DELLORTO

Nº	DESCRIPCION / DESCRIPTION	125 / 200	250 / 280	Cant.
1	CAPUCHÓN TENSOR CABLE GAS / ADJ. TENSION THROTTLE CABLE	-	M09001055	1
2	CTO. TENSOR CABLE / CABLE TENSION SET SCREW	-	M09001230	1
3	TENSOR CABLE GAS / CABLE TENSION TUBE	-	M09001032	1
4	TORNILLO TAPA CARBURADOR / SCREW COVER CARBURETOR	-	M09001025	2
5	TAPA CARBURADOR / COVER CARBURETOR	-	M09001156	1
6	AGUJA D36 3º PUNTO / NEEDLE D36	-	M09003136	1
7	MUELLE COMPUERTA / SPRING SLIDE	-	M09001015	1
8	PLANCHA SUJECIÓN CABLE GAS / CABLE RETAINER PLATE	-	M09001010	1
9	COMPUERTA / VALVE SLIDE	M09002050	M09002060	1
10	TÓRICA TAPA CARBURADOR / O	-	M09001050	1
11	TORNILLO SUJ. STARTER / CHOKE SCREW	-	M09001110	1
12	MANDO STARTER / CHOKE LEVER ASSY.	-	M09001105	1
13	TÓRICAS STARTER / CHOKE O'RING	-	M09001065	1
14	KIT CARBURACIÓN / CARBURETOR KIT	MT120690100	MT280690100	1
15	TORNILLO REG. ENTRADA AIRE / REG. ENTRANCE SCREW	-	M09001115	1
16	MUELLE TORNILLO REG. AIRE / SPRING SCREW REG. AIR	-	M09001120	1
17	ARANDELA TORN. REG. AIRE / WASHER SCREW BOLT REG. AIR	-	M09001125	1
18	TÓRICA TORNILLO REG. AIRE / O'RING SCREW BOLT REG. AIR	-	M09001075	1
19	TORNILLO REG. COMPUERTA / SCREW BOLT REG. SLIDE	-	M09001035	1
20	MUELLE TORNILLO REG. COMPUERTA / SPRING SCREW SLIDE	-	M09001040	1
21	ARANDELA TORNILLO REG. COMP. / WASHER SCREW REG. SLIDE	-	M09001045	1
22	TÓRICA TORNILLO REG. COMP. / O'RING SCREW REG. SLIDE VALVE	-	M09001060	1
23	JUNTA PIPETA GASOLINA / FUEL FILTER DISC	-	M09001095	1
24	PIPETA ENTRADA GASOLINA / FUEL ENTRY TUBE	-	M09001135	1
25	JUNTA TORNILLO PIPETA / GASKET SCREW BOLT	-	M09001100	1
26	TORNILLO PIPETA / BOLT	-	M09001140	1
27	EMULSOR / NEEDLE JET	M09005268	M09005271	1
28	CHICLE RALENTÍ 30 / JET SLOW 30	M09004036	M09004035	1
29	VÁLVULA FLOTADOR / FLOAT VALVE	-	M09001200	1
30	CHICLE STARTER 60 / JET CHOKE 60	-	M09007060	1
31	TÓRICA CHICLE STARTER / O'RING JET CHOKE	-	M09001070	1
32	EJE FLOTADOR / FLOAT SHAFT	-	M09001145	1
33	FLOTADOR 2X2 / FLOAT 2X2	-	M09008036	2

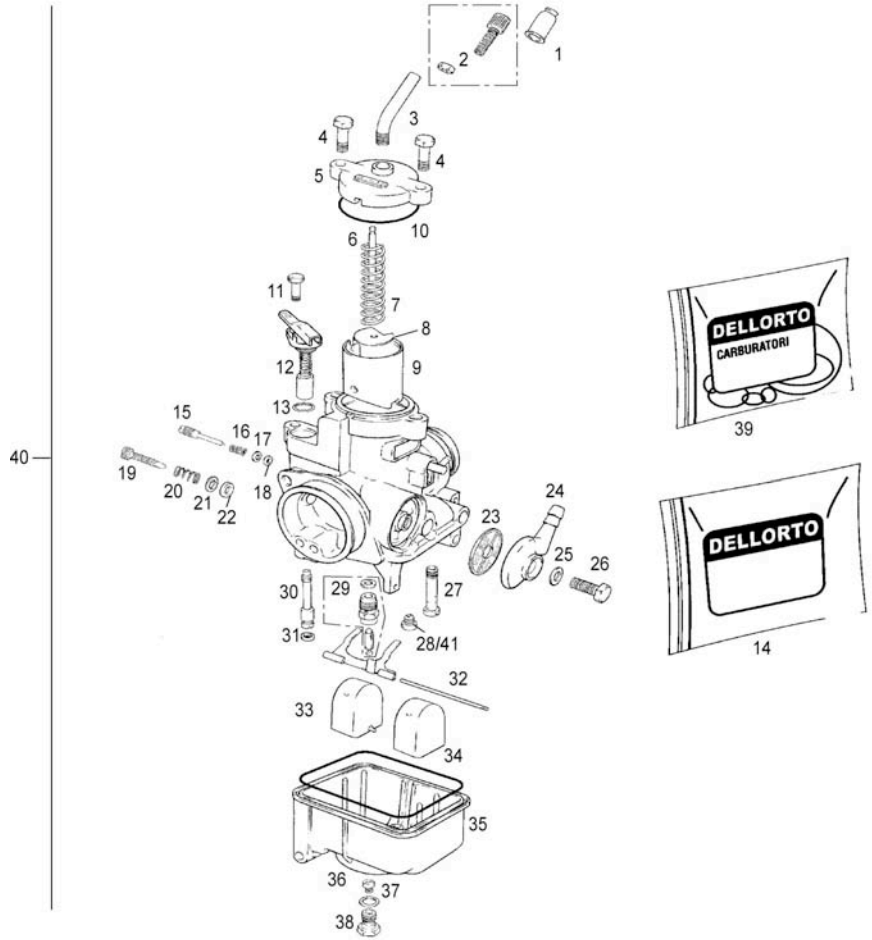
1
2
3
4
4
5
10
6
11
7
8
9
12
13
15
16
17
18
19
20
21
22
40
23
24
25
26
27
29
30
31
28/41
32
33
34
35
36
37
38
DELLORTO
CARBURATORI
39
DELLORTO
14

Nº	DESCRIPCION / DESCRIPTION	125 / 200	250 / 280	Cant.
34	TÓRICA CUBETA GASOLINA / O'RING FUEL BOWL	-	M09001085	1
35	CUBETA GASOLINA / FUEL BOWL	-	M09001150	1
36	CHICLE PRINCIPAL / MAIN JET	M09006105	M09006118	1
37	TÓRICA TAPÓN CUBETA / O'RING	-	M09001090	1
38	TAPÓN CUBETA GASOLINA / FUEL BOWL BOLT	-	M09001155	1
39	KIT JUNTAS CARBURADOR / GASKET CARBURETOR KIT	-	M09001101	1
40	CARBURADOR PHBL 26 BS / PHBL CARBURETOR COMPLETE	MT280290000	MT280290000	1
41	CHICLE DE BAJA 42 (116.20.42.02) / JET SLOW 42 (116.20.42.02)	MT280390442	-	

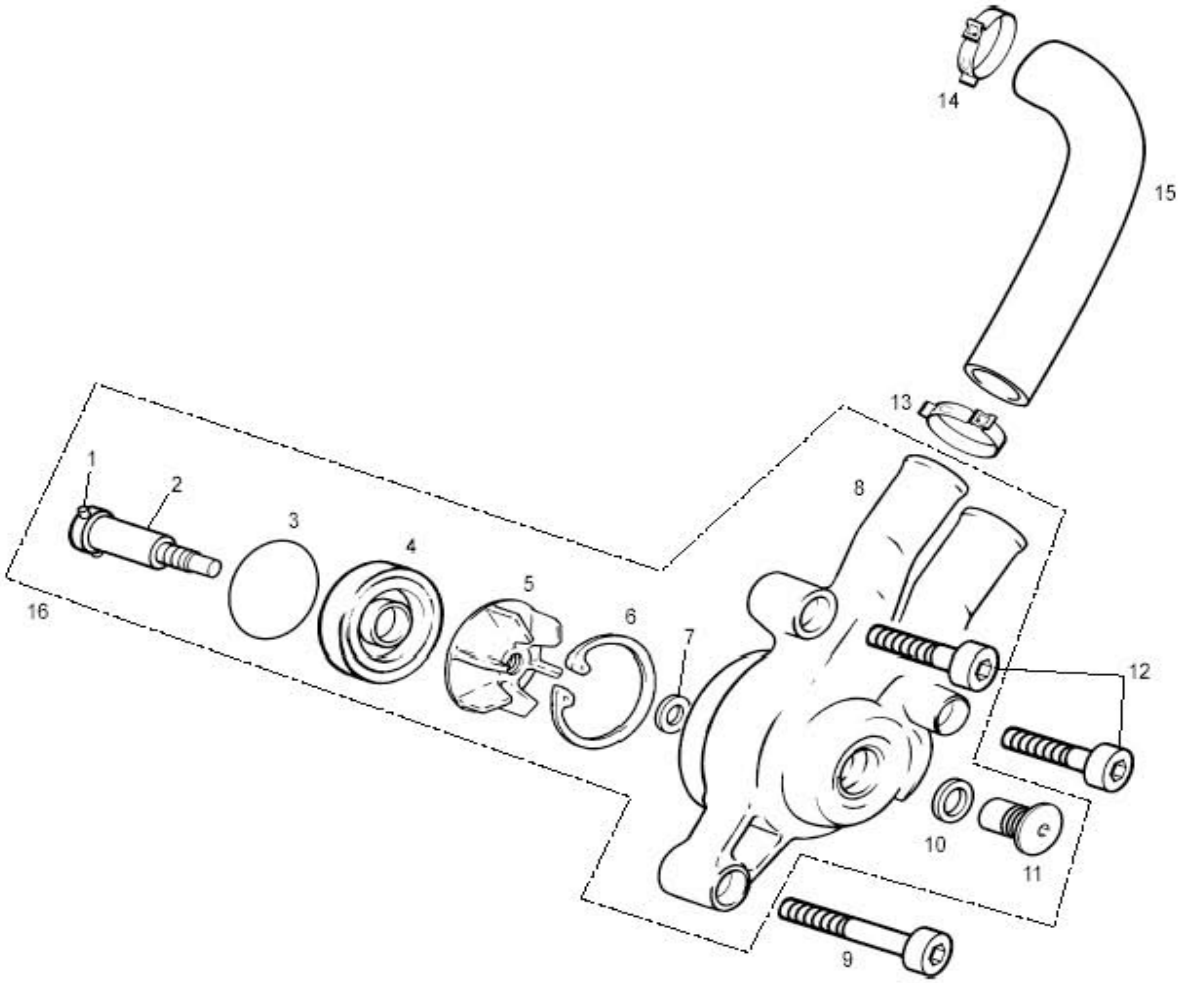
14
15
13
1
2
3
4
5
6
7
8
16
12
10
11
9

Nº	DESCRIPCION / DESCRIPTION	PRO2007	Cant.
1	PASADOR 3X22 EJE BOMBA / PUMP AXIS PIN	MT280218009	1
2	EJE BOMBA AGUA / AXLE TURBINE	MT280218006	1
3	TÓRICA 37X1.5 TAPA BOMBA AGUA / O'RING WATER PUMP COVER	MT280218008	1
4	RETÉN 10X35X7 DUO FKM / WATER PUMP SEAL	MT280210020	1
5	TURBINA BOMBA AGUA / WATER PUMP TURBINE	MT280218007	1
6	CIRCLIP 35 BOMBA AGUA / WATER PUMP CIRCLIP	MT280210019	1
7	ARANDELA TURBINA TRIAL / TURBINE WASHER	MT280218011	1
8	TAPA BOMBA AGUA / WATER PUMP COVER	MT280210008	1
9	ALLEN M5X40 DACROMET / M5X40 DACROMET ALLEN BOLT	T0305040	1
10	ARANDELA NYLON / NYLON WASHER	MT280218012	1
11	CASQUILLO BOMBA AGUA TRIAL 2002 / WATER PUMP BUSHING	MT280218002	1
12	ALLEN M5X35 DACROMET / M5X35 DACROMET ALLEN BOLT	T0305035	2
13	ABRAZADERA 20 / 20 CLAMP	L200035	1
14	ABRAZADERA COBRA 19 / 19 CLAMP	L200043	1
15	TUBO BOMBA – CILINDRO / PUMP TO CILINDER HOSE	BT280232017	1
16	CTO. TAPA BOMBA TRIAL PRO / COVER PUMP SET	MT280710008CT	1